Technical Manual

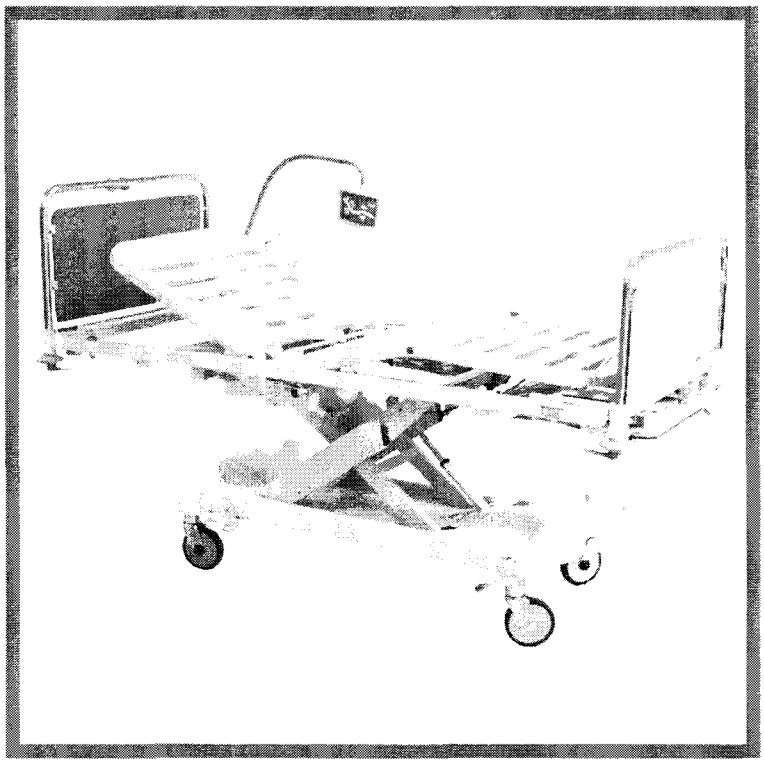

LI150Ax Bed

by

HILL - ROM

Hill-Rom®

A HILLENBRAND INDUSTRY

QD1233

Your national HILL ROM representative:

UK
Hill-Rom
Clinitron House
Ashby Park
Ashby de la Zouch
Leicestershire LE65 1JG
Tel: 01530 411000
Fax-Nr: 01530 411555

USA
Hill-Rom CO. INC
1069 State Route 46 east, J55
BATESVILLE INDIANA 47006 USA
Tel: 00 1 812 934 8173
Fax: 00 1 812 934 7191
Website: www.hill-rom.com
EMAIL: international@hill-rom.com

Manufacturer:

Hill-Rom

Z.I. du Talhouet, B.P. 14,

56330 PLUVIGNER, FRANCE.

© 1999

All rights reserved.

April, 1999

Hill-Rom and all Hill-Rom products mentioned in this manual are trademarks of the Hill-Rom company.

The only international warranty of the HILL-ROM product is the written express warranty which accompanies the invoice addressed to the original purchaser. HILL-ROM does not grant any other warranties, express or implied, nor does it grant warranties of merchantability or fitness of purpose for whatever the intent.

Note : While every care has been taken to ensure that the information contained in this manual is correct at time of going to press, HILL-ROM reserves the right to make changes to products and documentation without prior notice, in line with a policy of continuous improvement.

Hill-Rom

Date: July 6th, 2001

Fom: Technical Documentation Department

Subject: Dynamis LI150Ax/LI150Bx Beds Technical Manual

The present manual refers to the LI150Ax bed, but also covers the LI150Bx if used with the attached Errata Sheet (ref: QD1233_E1).

QD1233

Hill-Rom®
A HILLENBRAND INDUSTRY

Errata Sheet for Hill-Rom Dynamis LI150Ax Technical Service Manual (QD1233)

Since the creation of the Technical Service Manual of the *Dynamis LI150Ax bed* (QD1233), modifications have been made to the bed that require the Technical Service manual to be updated, particularly the new version of this bed: *LI150Bx*. The numbers of the pages affected and the main corrections to be made are listed below. Insert these pages in the *Dynamis LI150Ax bed* Technical Service Manual (QD1233).

Pages Affected	Modifications Required
General	The supplier of the bed's electrical components is now SKF; the new reference of the bed is LI150Bx (brought into production on 18 June 2001).
1- 4	Specifications of the LI150Bx bed identical to those of the LI150Ax (refer to table 1).
1- 7	Specifications of the SKF motors listed in table 2 attached.
1- 7	Regulatory requirements met by the LI150Bx are cited below.
1- 10	Model identifications are specified below.
1- 12	Identification label of the LI150Bx shown below.
3- 2	Cabling and positioning of the components of the LI150Bx bed specified in new electrical diagrams provided.
4- 2	New Procedure: 4-16 for removing the Control Unit on the LI150Bx.
4- 3	New Procedure: 4-17 for removing the SKF power unit.
4- 4	New Procedure: 4-18 for removing the Control Unit on flexible arm on the LI150Bx.
4- 5	New Procedure: 4-19 for removing the SKF lock-out unit.
Section 4	New Procedure: 4-20 for removing the SKF battery.
4- 6	New Procedure: 4-21 for removing the SKF Hi Low Motor.
4- 7	New Procedure: 4-22 for removing the SKF Head Section Motor.
4- 8	New Procedure: 4-23 for removing the SKF Knee Section Motor.
4- 12	New Procedure: 4-24 for removing the release cable on the SKF Head Section Motor.
Section 5	Addition of table 5.4.40 listing references of the electrical components on the LI150Bx bed.
Section 5	Addition of table 5.4.41 listing references of the main mechanical components specific to the LI150Bx bed.
Section 5	Addition of table 5.4.42 summarising the LI150Ax bed power units and motors.
6- 2	Addition of details relating to the preventive maintenance for the LI150Bx bed.
7- 2	Addition of details relating to the accessories of the LI150Ax and LI150Bx beds.

1233_E1tbl_pdg

These modifications will be integrated in the next revision of the *Hill-Rom LI150Ax/Bx Bed Service Manual* (QD1233A).

Notes

Specifications of the LI150Ax/ LI150Bx bed

General Description

Specifications	Dimensions
Type	Variable Height Bed
Outer length without extension	2176mm (85.67")
Class	I IPX4 type B
Specifications	**Dimensions**
Outer length without extension	2176mm (85.67")
Outer length with extension option (stored)	2211mm (87")
Outer length with extension option (in use)	2391mm (94.1")
Outer width without side-rails	970mm (38.2")
Outer width with side-rails	1040mm (40.95")
Height of sleep surface in low position (with Ø 125 castors)	436mm (17.16")
Height of sleep surface in low position (with Ø 150 castors)	457mm (18")
Height of sleep surface in high position (with Ø 125 castors)	762mm (30")
Height of sleep surface in high position (with Ø 150 castors)	783mm (3.8")
Minimum space under bed (Ø 125 castors)	165mm (6.49")
Minimum space under bed (Ø 150 castors)	186mm (7.3")
Maximum Head Section inclination	65°
Maximum Knee Section inclination	+36°/-10°
Maximum Single Leg Section inclination	20°
Height of side-rail above sleep surface	415mm (16.3")
Weight of bed (without mattress or accessories)	133kg (293.2lb)
Outer length without extension	2176mm (85.67")
Maximum lifted load	250kg (375lb)

Table 1-1 1233_E1tbl_101

Electrical Description

Motorised actuators

The specifications for the motorised actuators are as follows:

	Hi Low (all models)	Head Section (all models)	Knee Section (according to configuration)
Manufacturer	SKF	SKF	SKF
Reference	CAFS 7000N	CAFS 3000N	CAFS 7000N
Class	II	II	II
Power	120VA	96VA	72VA
Voltage	24Vcc	24Vcc	24Vcc
Intermittent service	10% maxi. 1 min/9 min	10% maxi. 1 min/9 min	10% maxi. 1 min/9 min

Table 1-3 1233_E1tbl_102

Regulatory Requirements

The 150Bx bed complies with CE Directive 93/42/CEE applicable to medical equipment.

CE NF MEDICAL

The LI150Bx bed complies with the following standards:

NF EN 60601-1

NF EN 60601-2-38 and amendment 1

NF EN 60601-1-2

NF S-90-312

Model Identification

The LI150Bx bed is designed for international use. The LI150B0 is the basic version to which functions are added that make up the basic versions of other countries according to the following rules:

a figure for Trendelenburg / Reverse Trendelenburg as an option on general care beds (LI150B1, LI150B2, etc.)

a letter for Trendelenburg / Reverse Trendelenburg on the basic intensive care bed (LI150BA, LI150BB, etc.)

The content of each version is the same as for the LI150Ax (refer to table 1.2, page 1-10 of the Technical Service Manual).

Identification Label for the LI150Bx bed

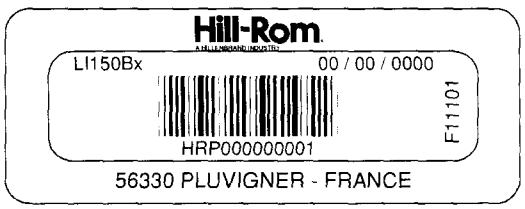

1232A103.wmf

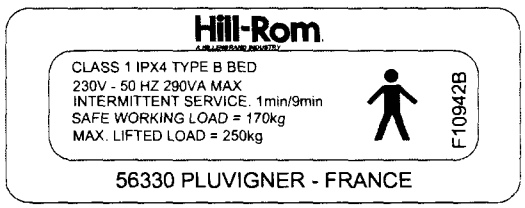

1233_E1_102.wmf

Notes

General cabling and positioning of components: LI150Bx bed with battery and/or Trendelenburg/Reverse Trendelenburg

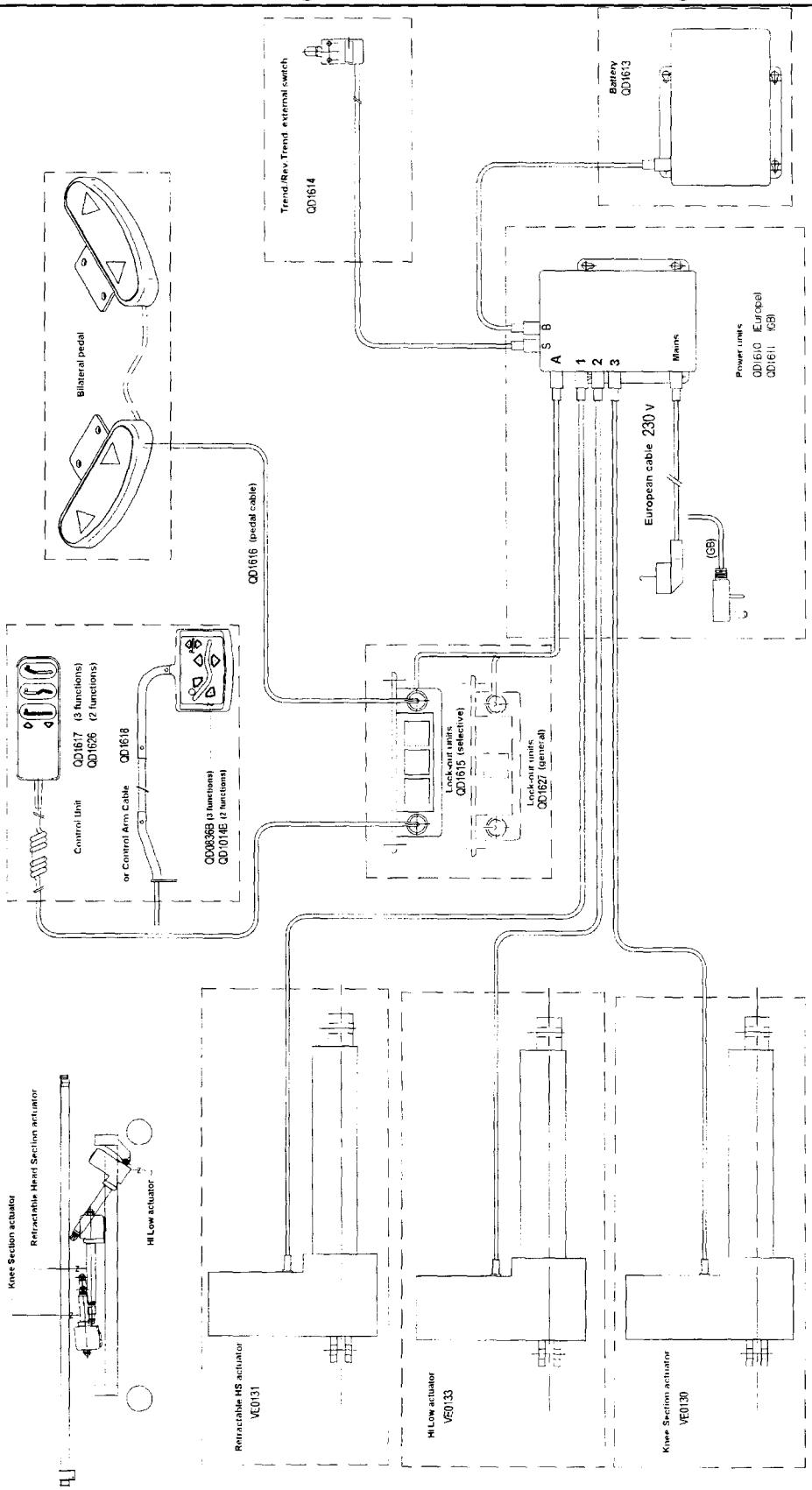

3

General cabling and positioning of components: LI150Bx without battery or Trendelenburg/Reverse Trendelenburg

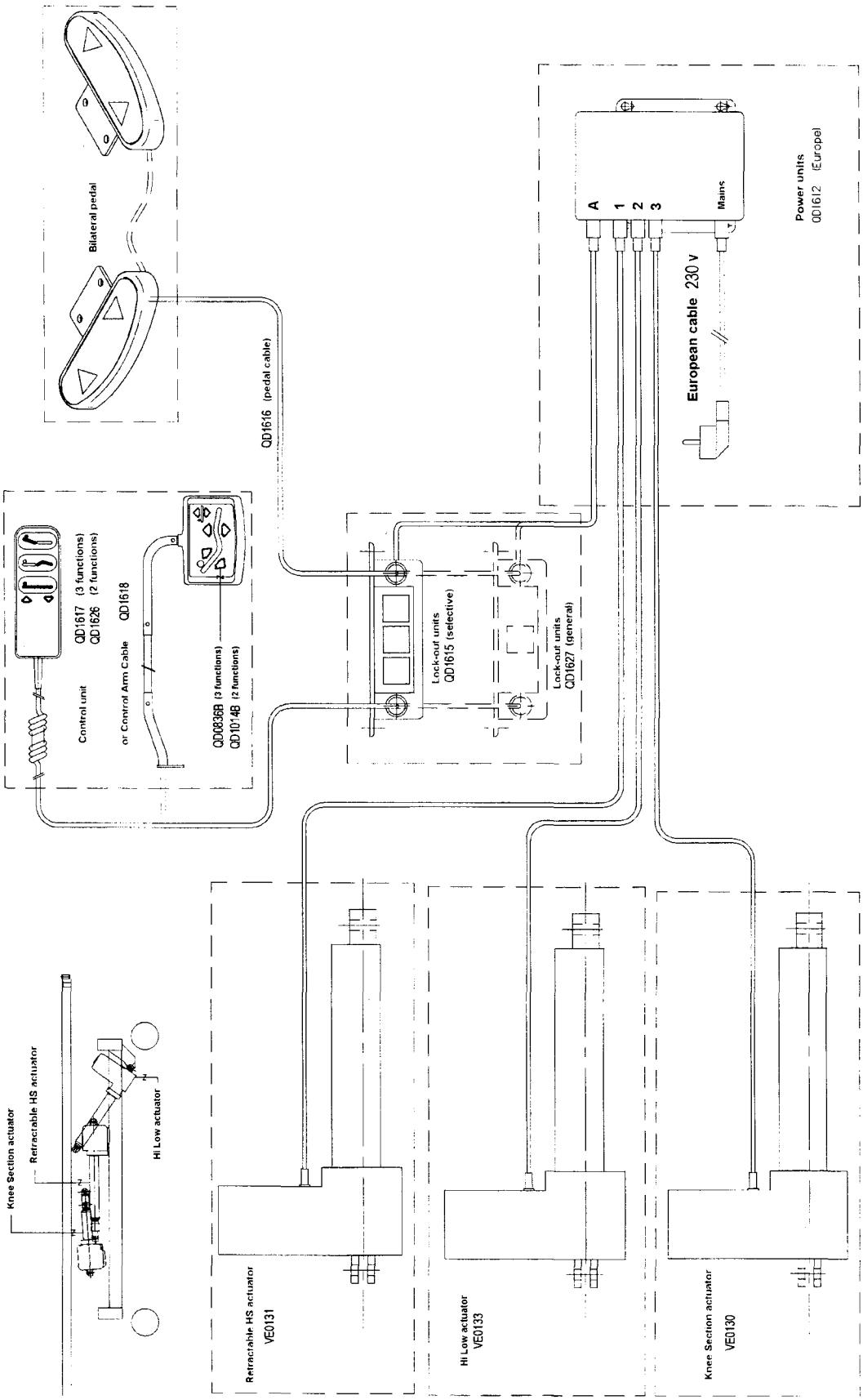

4.16 LI150Bx Control Unit

Tools required: 1 med. Phillips head screwdriver
1 wire tie cutter

Removal

1 Apply the brakes, and if possible, adjust the bed to its high position.

2 Remove the hard surfaces of the bed frame.

3 Unplug the bed from its power supply.

WARNING

Electric current passes through the connectors when the bed is switched on. Technical staff may be injured if the bed is not disconnected from its power supply.

4 Cut the wire tie securing the control unit cable to the lock-out unit cable.

5 With the medium Phillips head screwdriver, slightly loosen the screw (A) securing the lock-out unit located to the right of the sleep surface (refer to figure 1).

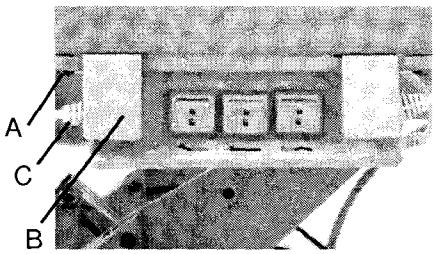

Figure 1 1232A116.tif

6 Slide the connector cover (B) to the middle of the lock-out unit (refer to figure 1).

7 Remove the connector (C) from the lock-out unit (refer to figure 1).

Installation

1 Perform the removal procedure in reverse order and replace the used wire tie.

2 Perform the "Functions Checks" on page 2.3 of the Technical Service Manual.

4.17 LI150Bx Power Unit

Tools required: 1 small flat blade screwdriver
1 med. Phillips head screwdriver
1 3mm Allen key
1 7mm open end wrench
1 8mm open end wrench

Removal

1 Apply the brakes then adjust the bed into the high position and horizontal.

2 Remove the hard surfaces of the bed frame.

3 Adjust the Head Section to the high position.

4 Unplug the bed from its power supply. If the bed has a battery, put the lock-out switches to their "locked out" position (padlock closed).

WARNING

Electric current passes through the connectors when the bed is switched on. Technical staff may be injured if the bed is not disconnected from its power supply.

5 Remove the 4 clips securing the cover plate (A) of the power unit (B) (refer to figure 1).

Note: the cover plate is located under the lift arms of the bed under the sleep surface.

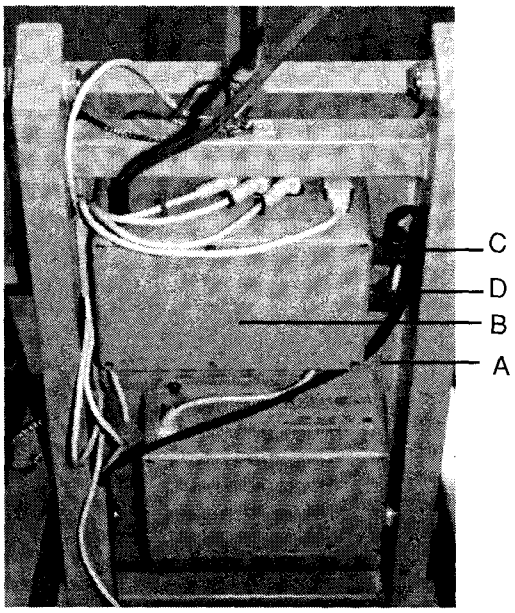

Figure 1 1232A117.tif

6 With the Phillips head screwdriver, unscrew and remove the strain relief bracket of the power cable, located under the bed frame.

7 Lift off the power unit's cover plate and disconnect the motor connectors and lock-out unit.

Note: the numbers of the power unit inputs and outputs are marked on the unit itself: in addition, *each motor cable has a clip with the* corresponding connection number.

8 With the 7mm open end wrench, unscrew the nut securing the ground strap to the power unit.

9 Only if the bed features Trendelenburg/ Reverse Trendelenburg: with the small flat blade screwdriver, unscrew the screw securing the Trendelenburg End Of Travel connector (C) to the power unit, and remove the connector (refer to figure 1).

10 Only if the bed has a battery: with the small flat blade screwdriver, unscrew the screw securing the battery connector (D) (refer to figure 1).

11 Remove the cover plate assembly of the power unit and place it on a workbench.

12 With the 8mm open end wrench and the 3mm Allen key, unscrew and remove the 2 screws securing the power unit to the cover plate.

Installation

1 Perform the removal procedure in reverse order.

2 Perform the "Functions Checks" on page 2.3 of the Technical Service Manual.

4

4.18 LI150Bx Control Unit on Flexible Arm

Tools required: 1 small flat blade screwdriver
1 med. Phillips head screwdriver
1 wire tie cutter

Removal

1 If possible, adjust the bed to high position and lower the side-rails if they are fitted on the bed.

2 Adjust the Head Section to the high position.

3 Remove the hard surfaces of the bed frame.

4 Unplug the bed from its power supply. If the bed has a battery, put the lock-out switches to their "locked out" position (padlock closed).

WARNING

Electric current passes through the connectors when the bed is switched on. Technical staff may be injured if the bed is not disconnected from its power supply.

5 Remove the cover plate from the power unit by pulling on the unit at the four securing clips, and recover these clips.

Note: the cover plate is located under the lift arms of the bed under the sleep surface.

6 With the Phillips head screwdriver, slightly loosen the left-hand attachment screw (A) of the lock-out unit and slide the connector cover (B) toward the middle of the unit (refer to figure 1).

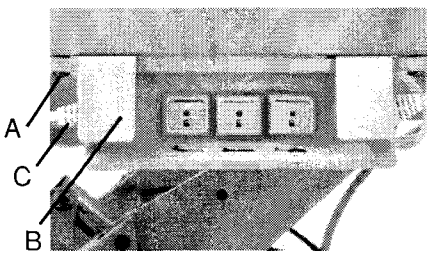

Figure 1 1232A116.tif

7 Remove the connector (C) from the lock-out unit (refer to figure 1).

8 With the wire tie cutter, cut the wire tie securing the lock-out unit cable to the sleep surface.

9 With the small flat blade screwdriver, open the 2 cable tracks located under the central cross

bar of the sleep surface.

10 Remove the spiral sleeve maintaining the cables in the cable tracks up to the power unit.

11 Lift off the cover plate of the power unit and remove the cables from the cover recess.

12 With the small flat blade screwdriver, open the cable track located on the bed frame lift arm by supporting the cable of the control unit on the flexible arm and free this cable.

13 With the medium Phillips head screwdriver, unscrew the four screws securing the two cable sleeve guides of the control unit under the Head Section. Recover the screws and the guides.

14 Unscrew the two knobs securing the annexed arm to the Head Section.

Installation

1 Perform the removal procedure in reverse order and replace the used wire tie.

2 Perform the "Functions Checks" on page 2.3 of the Technical Service Manual.

4.19 LI150Bx Lock-out Unit

Tools required: 1 med. Phillips head screwdriver
1 wire tie cutter
1 small flat blade screwdriver

Removal

1 Apply the brakes then adjust the bed to the high position and horizontal.

2 Remove the hard surfaces of the bed frame.

3 Adjust the Head Section to the high position.

4 Unplug the bed from its power supply. If the bed has a battery, put the lock-out switches to their "locked out" position (padlock closed).

WARNING

Electric current passes through the connectors when the bed is switched on. Technical staff may be injured if the bed is not disconnected from its power supply.

5 Remove the 4 clips securing the cover plate of the power unit (A) (refer to figure 1).

Note: the cover plate is located under the lift arms of the bed under the sleep surface.

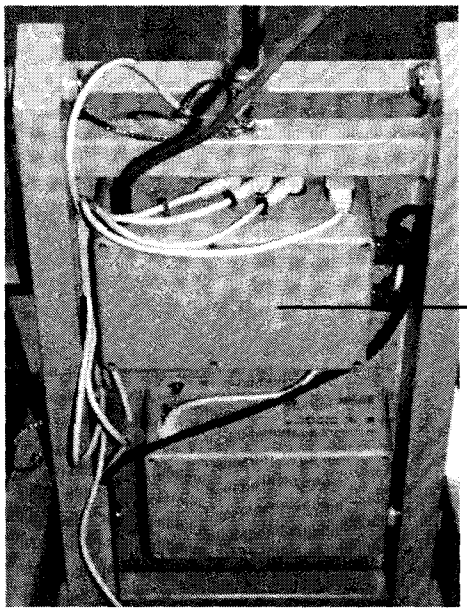

Figure 1 1232A117.tif

6 Lift off the cover plate of the power unit and disconnect connector A.

Note: the numbers of the power unit inputs and outputs are marked the unit itself: in addition, each motor cable has a clip with the number of the corresponding connection.

7 With the small flat blade screwdriver, open the cable track of the lift arm and remove the lock-out unit cable.

8 Remove the spiral sleeve linking the cables of the lock-out unit and the HS and KS motors.

9 With the small flat blade screwdriver, open the two cable tracks located under the central cross bar of the bed frame and remove the cable.

10 With the wire tie cutters, cut the wire tie securing the cables at the power unit.

Note: these cables must pass behind the accessory support.

11 With the small flat blade screwdriver, open the cable track on the right-hand long side of the bed frame and remove the lock-out unit cable.

12 With the Phillips head screwdriver, remove the two screws (B) securing the lock-out unit. Recover these screws together with the 2 connector covers (C) (refer to figure 2)

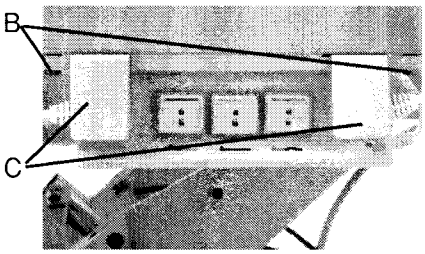

Figure 2 1232A116.tif

13 Disconnect the connectors from the lock-out unit.

Note: the hand pendant control unit or the control unit on the flexible arm is connected to the left of the lock-out unit, because the HL pedal is always connected at the right-hand side.

Installation

1 Perform the removal procedure in reverse order and replace the used plastic wire tie.

2 Perform the "Functions Checks" on page 2.3 of the Technical Service Manual.

4.20 LI150Bx Battery

Tools required: 1 small flat blade screwdriver
1 3mm Allen key
1 8mm open end wrench

Removal

1 Apply the brakes then adjust the bed to the high position and horizontal.

2 Remove the hard surfaces of the bed frame.

3 Adjust the Head Section to the high position.

4 Unplug the bed from its power supply. Put the lock-out switches to the "locked out" position (padlock closed).

WARNING

Electric current passes through the connectors when the bed is switched on. Technical staff may be injured if the bed is not disconnected from its power supply.

5 Remove the 4 clips securing the cover plate (A) of the power unit (B) and the battery (C) (refer to figure 1).

Note: the cover plate is located under the lift arms of the bed under the sleep surface.

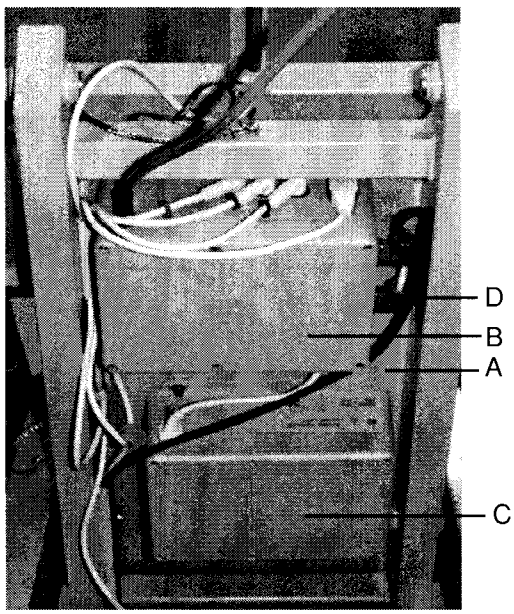

Figure 1 1232A117.tif

6 Slightly raise the cover plate of the power unit and battery to gain access to the battery connector (D) on the right-hand side of the bed (refer to figure 1), then unscrew the screw securing the connector (D) by using the small flat blade screwdriver.

7 Disconnect the battery connector.

8 With the 8mm open end wrench and the 3mm Allen key, unscrew and remove the 2 screws securing the battery, while supporting the battery.

Installation

1 Perform the removal procedure in reverse order.

2 Perform the "Functions Checks" on page 2.3 of the Technical Service Manual.

4.21 LI150Bx Hi Low Motor

Tools required: 1 small flat blade screwdriver

Removal

1 Apply the brakes then, if possible, adjust the bed into the high position and horizontal. Remove the side-rails if the bed is fitted with them.

2 Remove the hard surfaces of the bed frame.

3 Adjust the Head Section to the high position.

4 Unplug the bed from its power supply. If the bed has a battery, put the lock-out switches to their "locked out" position (padlock closed).

WARNING

Electric current passes through the connectors when the bed is switched on. Technical staff may be injured if the bed is not disconnected from its power supply.

5 Set the brake/steering pedal to neutral, then position the bed so that the left-hand side castors (viewpoint of a patient lying on the bed) are facing inwards. Apply the brakes on the bed.

6 Lay the bed on its left-hand side.

WARNING

Two people are required to carry out this operation. Disregarding this precaution may result in injuries.

7 Remove the 4 clips securing the cover plate of the power unit.

Note: the cover plate is located under the lift arms of the bed under the sleep surface.

8 Shift the cover plate of the power unit and open the two cable tracks on the lift arm by using the small flat blade screwdriver.

9 Disconnect connector 2 of the power unit, then remove the cable from the cable tracks.

Note: the numbers of the power unit inputs and outputs are marked on the unit itself, in addition, each motor cable has a clip with the number of the corresponding connection.

10 Remove the Truarc circlips from the pin located at the base of the HL motor and remove the corresponding pin.

11 Remove one of the Truarc circlips from the end pin of the HL motor and remove the corresponding pin while holding the motor.

12 Remove the motor from the chassis.

Installation

1 With the bed still on its side, rest it on the two corner buffers and bring the chassis and bed frame closer together without letting the castors touch the ground.

2 Position the Hi Low motor and fit the end pin.

3 Fit the missing Truarc circlips to the end pin of the motor.

4 Adjust the position of the motor base with respect to its supports (by moving the bed frame and chassis further apart or closer together) and fit the supporting pin.

5 Fit the missing Truarc circlips to the pin at the base of the motor.

6 Run the motor cable through the lift arm cable tracks, then close the cable tracks.

7 Stand the bed on its castors.

WARNING

Two people are required to carry out this operation. Disregarding this precaution may result in injuries.

8 Perform steps 9 to 7, then 5 to 1 of the removal procedure in reverse order, then perform the "Functions Checks" on page 2.3 of the Technical Service Manual.

4

4.22) LI150Bx Head Section Motor

Tools required: 1 small flat blade screwdriver
1 10mm open end wrench
1 adjustable wrench
1 needle nosed pliers
1 wire tie cutter

Removal

1 Apply the brakes then adjust the bed to the high position and horizontal.

2 Remove the hard surfaces of the bed frame.

3 Adjust the Head Section to the high position.

4 Unplug the bed from its power supply. If the bed has a battery, put the lock-out switches to their "locked out" position (padlock closed).

WARNING

Electric current passes through the connectors when the bed is switched on. Technical staff may be injured if the bed is not disconnected from its power supply.

5 Remove the 4 clips securing the cover plate of the power unit.

Note: the cover plate is located under the lift arms of the bed under the sleep surface.

6 Lift off the cover plate of the power unit and disconnect connector no. 1.

Note: the numbers of the power unit inputs and outputs are marked on the unit itself, in addition, each motor cable has a clip with the number of the corresponding connection.

7 With the small flat blade screwdriver, open the cable track of the lift arm and remove the cable.

8 Remove the spiral sleeve maintaining the cables at the power unit.

9 With the small flat blade screwdriver, open the cable track located under the bed frame cross bar at the Head Section Motor end and remove the cable.

10 Operate the emergency CPR handle to lay the Head Section flat.

11 With the 10mm open end wrench, remove the equipotential terminal at the head end of the sleep surface.

12 With the adjustable wrench, operate the release bracket (A) of the Head Section motor (refer to figure 1) so as to free the end ball of the cable at the release handle.

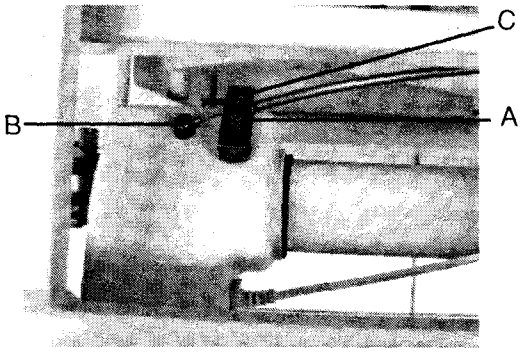

Figure 1 1232A118.tif

13 With the needle nosed pliers, pull the end ball of the release cable at the equipotential terminal end in order to remove it from its support.

14 Free the cable from the cable stop (B) (refer to figure 1).

15 Pull the cable sleeve in order to remove the release bracket assembly (A) (refer to figure 1).

16 Recover the sleeve stop (C) (refer to figure 1).

17 With the wire tie cutter, cut the wire tie securing the motor cable to the motor body.

18 Remove the Truarc circlips from the end pin of the actuator and remove the corresponding pin.

19 Remove the Truarc circlips from the pin located at the base of the motor and remove the corresponding pin.

20 Remove the motor from the bed.

Installation

1 Perform the removal procedure in reverse order and replace the used wire tie.

2 Perform the "Functions Checks" on page 2.3 of the Technical Service Manual.

4.23 LI150Bx Knee Section Motor

Tools required: 1 small flat blade screwdriver

1 Apply the brakes then adjust the bed to the high position and horizontal.

2 Remove the hard surfaces of the bed frame.

3 Adjust the Head Section to the high position.

4 Unplug the bed from its power supply. If the bed has a battery, put the lock-out switches to their "locked out" position (padlock closed).

WARNING

Electric current passes through the connectors when the bed is switched on. Technical staff may be injured if the bed is not disconnected from its power supply.

5 Remove the 4 clips securing the cover plate of the power unit.

Note: the cover plate is located under the lift arms of the bed under the sleep surface.

6 With the small flat blade screwdriver, open the two cable tracks of the bed frame central cross bar.

7 Remove the spiral sleeve maintaining the cables in the cable tracks up to the power unit.

8 Shift the cover plate of the power unit and open the two cable tracks on the lift arm by using the small flat blade screwdriver and remove the cable.

9 Disconnect connector no. 3 of the power unit.

Note: the numbers of the power unit inputs and outputs are marked on the unit itself, in addition, each motor cable has a clip with the number of the corresponding connection.

10 With the wire tie cutter, cut the wire tie securing the motor cable to the motor body.

11 Remove the Truarc circlips from the end pin of the actuator and remove the corresponding pin.

12 Remove the Truarc circlips from the pin located at the base of the motor and remove the corresponding pin.

13 Remove the motor from the bed.

Installation

1 Perform the removal procedure in reverse order and replace the used wire tie.

2 Perform the "Functions Checks" on page 2.3 of the Technical Service Manual.

4.24 LI150Bx Head Section Release Cable

Tools required: 1 adjustable wrench
1 10mm open end wrench
1 needle nosed pliers

Removal

1 Apply the brakes then adjust the bed to the high position and horizontal.

2 Remove the hard surfaces of the bed frame.

3 Put the Head Section in low position with the electric control or operating the emergency CPR or directly using the control bracket on the Head Section motor.

4 Unplug the bed from its power supply. If the bed has a battery, put the lock-out switches to their "locked out" position (padlock closed).

WARNING

Electric current passes through the connectors when the bed is switched on. Technical staff may be injured if the bed is not disconnected from its power supply.

5 With the 10mm open end wrench, remove the equipotential terminal at the head end of the sleep surface.

6 With the adjustable wrench, operate the release bracket (A) of the Head Section motor (refer to figure 1) so as to free the end ball of the cable at the release handle.

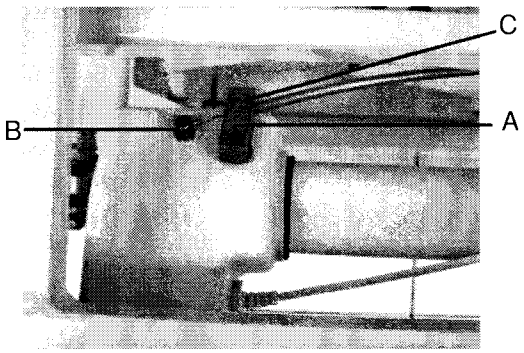

Figure 1 1232A118.tif

7 With the needle nosed pliers, pull the end ball of the release cable at the equipotential terminal end in order to remove it from its support.

8 Remove the sleeve from its guide on the inner left-hand long side of the bed frame.

9 Free the cable from the cable stop (B) (refer to figure 1).

10 Pull the cable sleeve in order to remove the release bracket assembly (A) (refer to figure 1).

11 Recover the sleeve stop (C) (refer to figure 1).

Installation

1 Perform the removal procedure in reverse order.

2 Perform the "Functions Checks" on page 2.3 of the Technical Service Manual.

4

5.4.40 LI150Bx electrical components and attachments

No.	Page	Qty	Reference	Description
				Power units + Battery
2	5-61	1	QD1610	SKF **Europe** power unit **with** Trendelenburg EOT switch input **and/or** battery input
2	5-61	1	QD1611	SKF **(United Kingdom)** power unit **with** Trendelenburg EOT switch input **and/or** battery input
2	5-61	1	QD1612	**Europe** power unit **without** Trendelenburg EOT switch input, **without** battery input
/	/	1	QD1613	SKF battery
10	5-63	4	VI0464	Screws for power unit and battery attachment
/	/	4	VI0390	Washers for power unit and battery attachment
12	5-63	4	VI0370	Lock nut for power unit and battery attachment
3	5-63	1	S21001	Cover plate for power unit + battery (casing)
4	5-63	4	QD1186	Pressure clips Dia. 5.8 for Cover plate attachment
/	/	1	F10992	Twisted open sleeve for cable plate
				Lock-out and Control units
16	5-65	1	QD1627	General lock-out unit
17	5-65	1	QD1615	Selective lock-out unit
/	/	2	VI0418	Screws for lock-out unit attachment
			QD0404	Wire tie for cable attachment
5	5-65	1	QD1626	2-function hand pendant control unit
5	5-65	1	QD1617	3-function hand pendant control unit
8	5-67	1	QD1014B	2-function control unit on flexible arm
8	5-67	1	QD0836B	3-function control unit on flexible arm
				Motors
16	5-5	1	VE0133	**SKF Hi Low** Motor
18	5-5	2	S10658	HL Motor attachment pin
17	5-5	4	QD0527	Truarc circlips Dia. 12 for VH Motor attachment pin
/	5-9	1	QD1614	Trendelenburg external End Of Travel Switch
28	5-11	1	LTZ882	Trendelenburg switch support
32	5-11	2	VI0418	Attachment screw for Trend. switch support VAT no.10*13
29	5-11	2	VI0334	Attachment screw for Trendelenburg switch
31	5-11	2	VI0460	M4 lock nut
30	5-11	2	S10793	Trendelenburg switch attachment spacer
10	5-27	1	VE0131	**SKF Head Section** Motor
11	5-27	2	S10658	HS Motor attachment pin
12	5-27	4	QD0527	Truarc circlips Dia. 12 for HS Motor attachment pin
19	5-27	1	QD0404	Wire tie for cable
1	5-71	1	VE0130	**SKF Knee Section** Motor
3	5-71	2	S10658	KS Motor attachment pin
2	5-71	4	QD0527	Truarc circlips Dia. 12 for KS Motor attachment pin
/	/	1	QD0404	Wire tie for motor cable
				Variable Height Pedal: refer to next page

1233_E1tbl_501

5.4.41 LI150Bx Mechanical Components

No.	Page	Qty	Reference	Description
				Cables and attachment
3 and 5	5-27	1	QD1231A	Head Section release cable and sleeve
7	5-29	1	QD1213A	Trendelenburg / Reverse Trendelenburg cable and sleeve (applicable for LI150Ax)
/	/	1	LT1374	Tr./Rev. Tr. cable and sleeve support on bedframe
/	/	1	VI0516A	Tr./Rev. Tr. cable and sleeve support attachment screw
/	/	1	VI0376	Washer for Tr./Rev. Tr. cable and sleeve support attachment screw
				Covers
26	5-11	1	F11004	Chassis cover for LI150Bx with Tr./Rev. Tr.: beige
26	5-11	1	F11003	Chassis cover for LI150Bx with Tr./Rev. Tr.: white
26	5-7	1	F10265	Chassis cover for LI150Bx without Tr./Rev. Tr.: beige
				Hi Low Pedal
/	/	1	QD1262	Label
/	/	2	S10875	Pedal pin
/	/	2	S20864	Press pad for switches
/	/	2	F11070	Painted pedal metal support
/	/	4	S20868	Switch support pin
/	/	2	S30452	Pedal cover
/	/	2	S30453	Pedal base
/	/	18	VI0426	Plastic screw T45 CBL 4*10 Z.B.
/	/	4	VI0514	Metal attachment screw N 14*19 for pedal on chassis
/	/	1	F11024	Cable track L= 200mm on lift arm
/	/	1	F10720	Cable track L= 400mm under chassis
/	/	1	QD0404	Wire tie 186 - 210
/	/	1	QD1616	Electric cable + HL pedal switch kits for LI150Bx

1233_E1tbl_502

5.4.42 Summary of LI150Ax Power Units and Motors

No.	Page	Qty	Reference	Description
				DEWERT Power units + Battery
2	5-61	1	QD0824B1	Power unit **(Europe) without autocontour**
2	5-61	1	QD0824B2	Power unit **(United Kingdom) without autocontour**
2	5-61	1	QD0824B3	Power unit **(Switzerland) without autocontour**
2	5-61	1	QD0907B1	Power unit **(Europe) with autocontour**
2	5-61	1	QD0907B2	Power unit **(United Kingdom) with autocontour**
2	5-61	1	QD0907B3	Power unit **(Switzerland) without autocontour**
2	5-61	1	QD1204A1	Power unit **(Europe) for Battery** (separate)
2	5-61	1	QD1204A2	Power unit **(United Kingdom) for Battery** (separate)
2	5-61	1	QD1204A3	Power unit **(Switzerland) for Battery** (separate)
2	5-61	1	QD1249	Power unit 110V with autocontour
/	/	1	QD1205	Battery for QD1204 power units
				Motors
16	5-7	1	VE0092A	**Hi Low** Motor without Trendelenburg
16	5-9	1	VE0108A	**Hi Low** Motor with Trendelenburg up to 24/10/00
16	5-9	1	VE0111	**Hi Low** Motor with Trendelenburg from 24/10/00 to 18/06/01
26	5-9	1	LTZ882	Trendelenburg switch support up to 24/10/00
27	5-9	2	VI0388	Screw for switch support LTZ882
29	5-9	2	VI0334	Attachment screw for Trend. switch support up to 24/10/00
31	5-11	2	VI0460	M4 lock nut
26	5-9	1	LTZ883	Trendelenburg switch support from 24/10/00 to 18/06/00
27	5-9	2	VI0418	Screw for switch support LTZ883
29	5-11	2	VI0406	Attachment screw for Trend. switch support from 24/10/00 to 18/06/00
31	5-11	2	VI0460	M4 lock nut
10	5-27	1	VE0090B	**Head Section** Motor
1	5-71	1	VE0096	**Knee Section** Motor
3	5-71	2	S10658	KS Motor attachment pin
				Hi Low Pedal from 01/02/2000 to 18/06/01 (Pedal in two sections)
6	5-67	1	/	Mechanical components: same as previous page
3	5-67	4	QD0913	HL pedal switches
5	5-67	8	QD0914	Thermo-retractable sleeve
/	/	1	QD1436	HL pedal linking cable to power unit
/	/	1	F1Z016	HL pedal intermediate cable L=1350

1233_E1tbl_503

Notes

5

Preventive Maintenance

The 150Bx must follow the same preventive maintenance schedule as the LI150Ax bed. Please refer to the Technical Service Manual of the LI150Ax bed.

Service recommendations: same as for the LI150Ax bed.

Notes

6

7.1 Summary List

Note: LI150Ax bed accessories can be used on the LI150Bx bed with the exception of the electrical accessories (AD023A and AD034A) which are incompatible. In addition, the references of the new side-rails are listed in the table below.

Reference	Description
AD092A	Bilateral pedal kit for LI150**A**x beds manufactured from 24/10/00 to 18/06/01
	Metal side-rails length 200
AC998AA	Foldaway **epoxy** side-rails
AC998AC	Pair of foldaway **epoxy** side-rails with double security locking
AC998AB	Foldaway **chrome** side-rails
AC998AH	Pair of foldaway **chrome** side-rails with double security locking
	Metal side-rails length 190
AC998AE	Pair of foldaway **epoxy** side-rails
AC998AG	Pair of foldaway **epoxy** side-rails with double security locking
AC998AF	Foldaway **chrome** side-rails
AC998AH	Pair of foldaway **chrome** side-rails with double security locking
	Wood side-rails length 200
AC987A	Pair of wood side-rails for "Médiconfort" endboards
AC988A	Pair of wood side-rails for "Médiconfort, Médiligne and Séquoia" endboards

1233_E1tbl_701

Note: Do not reverse the side-rails;

- **Side-rails 200 on bed with sleep surface 190: reduced head end space.**
- **Side-rails 190 on bed with sleep surface 200: reduced efficiency of the side-rails.**

Notes

Table of contents

Revision index VI

Chapter1: Introduction

Purpose of this manual 1-2

Who should use this manual 1-2

Organization of this manual 1-2

- Chapter 1: Introduction 1-2
- Chapter 2: Troubleshooting procedures ... 1-2
- Chapter 3: Theory of operation 1-2
- Chapter 4: Removal, replacement and adjustment procedures 1-2
- Chapter 5: Parts list 1-2
- Chapter 6: General procedures 1-2
- Chapter 7: Accessories 1-2

Typographical conventions used in this manual 1-2

- Glossary of Abbreviations 1-3
- Operating precautions 1-4
- Positions of the bed 1-4
- LI150Ax bed specifications 1-4
- General description 1-4
- Electrical Description 1-6
- Regulatory requirements 1-7

LI150Ax General operation 1-8

Siderail operation (accessories) 1-8

Bed positions 1-8

Model identification 1-10

CAUTION and WARNING texts 1-11

LI150Ax bed identification labels 1-12

Warning labels 1-13

Chapter 2: Troubleshooting Procedures

Getting started 2-2

Initial Actions 2-2

Function checks 2-3

Final Actions 2-4

2.1 Bed raising function not operating 2-4

2.2 Bed lowering function not operating ... 2-6

2.3 Raising function of the Head Section not operating 2-8

2.4 Lowering of the Head Section not operating 2-10

2.5 Raising of the Knee section (option) not operating 2-11

2.6 Lowering of the Knee section (option) not operating 2-13

2.7 Auto contour function (option) not operating 2-14

2.8 Trendelenburg/Reverse Trendelenburg function (optional) not operating correctly 2-16

2.9 CPR function not operating correctly . 2-17

Chapter 3: Theory of operation

General wiring and element structure - LI150Ax 3-2

3.1 General Operation 3-3

- 3.1.1 Sliding head section 3-3
- 3.1.2 Auto-contour mode (optional, according to configuration) 3-3
- 3.1.3 Head and Footboards 3-3
- 3.1.4 Linen holder (optional, according to configuration) 3-3
- 3.1.5 Siderails (accessories) 3-3
- 3.1.6 Casters 3-4

3.2 Sub-system Theory 3-4

- 3.2.1 Mechanical sub-system 3-4
- 3.2.2 Electrical sub-system 3-5

Chapter 4: Removal, Replacement, and Adjustment Procedures

4.1 Pendant 4-2

- Disassembly 4-2
- Reassembly 4-2

4.2 Power unit 4-3

- Disassembly 4-3
- Reassembly 4-3

4.3 Flexible arm pendant 4-4

- Disassembly 4-4

Reassembly 4-4
4.4 Lockout unit 4-5
Disassembly 4-5
Reassembly 4-5
4.5 Hilow motor 4-6
Disassembly 4-6
Reassembly 4-6
4.6 Head Section motor 4-7
Disassembly 4-7
Reassembly 4-8
4.7 Knee section motor 4-8
Disassembly 4-8
Reassembly 4-9
4.8 Trendelenburg/Reverse Trendelenburg .. 4-9
4.8.1 Trendelenburg/Reverse Trendelenburg control cable 4-9
Disassembly 4-9
Reassembly 4-10
Adjustment 4-10
4.8.2 Trendelenburg/Reverse Trendelenburg gas cylinders 4-11
Disassembly 4-11
Reassembly 4-11
4.9 Head Section release cable 4-12
Disassembly 4-12
Reassembly 4-12
Adjustment. 4-12
4.10 Head Section shock absorbing gas cylinder 4-13
Disassembly 4-13
Reassembly 4-13
4.11 Head and Footboards 4-13
Disassembly 4-13
Reassembly 4-13
4.12 Single Foot Section Rack 4-14
Disassembly 4-14
Reassembly 4-14
4.13 Bed extension 4-14
Disassembly 4-14
Reassembly 4-15
4.14 Bed frame linen holder 4-15
Disassembly 4-15
Reassembly 4-16
4.15 Linen holder on bed extension 4-16
Disassembly 4-16
Reassembly 4-16

Chapter 5: Parts List

5.1 Replacement Part Ordering Procedure .. 5-2
5.2 Exchange policy 5-3
In-Warranty Exchanges 5-3
5.3 Recommended Spare Parts 5-3
5.4 LI150Ax 5-4
5.4.1 Base + elevation without shroud .. 5-4
5.4.2 Base + elevation with shroud 5-6
5.4.3 Base + Trendelenburg/Reverse Trendelenburg elevation, without shroud 5-8
5.4.4 Base + Trendelenburg/Reverse Trendelenburg elevation, with shroud 5-10
5.4.5 Casters 5-12
5.4.6 Motor crossbar Trendelenburg/ Reverse Trendelenburg 5-14
5.4.7 Crossbar without Trendelenburg/ Reverse Trendelenburg 5-16
5.4.8 Brake pedal 5-18
5.4.9 Brake system 5-20
5.4.10 Frame 5-22
5.4.11 Frame on Trendelenburg/Reverse Trendelenburg elevation 5-24
5.4.12 Head section clutch 5-26
5.4.13 Trendelenburg/Reverse Trendelenburg handle 5-28
5.4.14 T/RT release on frame or extender 5-30
5.4.15 Head bumper support 5-32
5.4.16 Board quick assembly system 5-34
5.4.17 Extender on frame 5-36
5.4.18 Linen holder on frame 5-38
5.4.19 Linen holder on extender 5-40
5.4.20 Side protections 5-42
5.4.21 Accessory holding bar 5-44
5.4.22 Egress bar fittings 5-46
5.4.23 Sliding head section 5-48
5.4.24 Single foot section on SHS frame 5-50
5.4.25 Knee section on SHS frame 5-52
5.4.26 Hard surfaces on frame 5-54
5.4.27 Flexible arm pendant 5-56

5.4.28 Flexible arm on head section 5-58
5.4.29 Power supply 5-60
5.4.30 Power supply on elevation arm... 5-62
5.4.31 Lockout unit 5-64
5.4.32 2-Side pedal 5-66
5.4.33 2-side pedal on frame 5-68
5.4.34 Knee section motor assembly 5-70
5.4.35 Ø: 32 round tube headboard 5-72
5.4.36 Ø: 32 round tube footboard 5-74
5.4.37 Mediform board 5-76
5.4.38 Sliding head section 5-78
5.4.39 Monitor holder 5-80

Chapter 6: General Procedures

Cleaning and Care 6-2
Overall cleaning 6-2
Spray washing 6-2
Hard to clean spots 6-2
Disinfection 6-2
Lubrication requirements 6-2
Preventive Maintenance 6-2
Preventive Maintenance Schedule 6-3
Preventive maintenance checklist 6-5
Tool and Supply Requirements 6-6

Chapter 7: Accessories

7.1 Summary List 7-2
7.2 Accessory details. 7-3
7.2.1 Siderails 7-3
7.2.1.1 Siderails "AC996E - AC996C" 7-3
7.2.1.2 Siderail "AD070C" 7-4
7.2.2 Poles 7-4
7.2.2.1 Fixed Angle Poles "AC954E - AC954C" 7-4
7.2.2.2 Fixed Angle Pole AD077C 7-4
7.2.2.3 Pivoting Angle Pole "AD024E - AD024C" 7-4
7.2.2.4 Pivoting Angle Pole AD043C 7-4
7.2.2.5 Central Poles AD078C and AC911A 7-4
7.2.3 Egress Bar AD021A 7-5
7.2.4 Two fittings kit for the egress bar (AD020B) 7-5
7.2.5 Flexible arm pendant kit AD023A (3 electrical functions) and AD034A (2 electrical functions) 7-6
7.2.6 Linen holder kit (AD026A) 7-7
7.2.7 Monitor Holder (AC997A) 7-7
7.2.8 Equipotential cable link (AC968A) 7-7
7.2.9 IV Rod AC941A 7-7
7.2.10 Head End Basket AC937A 7-8
7.2.11 Bottle Holder AC944A 7-8
7.2.12 Control box Holder AC955A 7-8
7.2.13 Crutch Holder on Chrome Plated Board AD072A 7-8
7.2.14 Serum Bottle Holder on Pole AC953A 7-8

Revision index

Program	Title	Part number
LI150Ax Bed by Hill-Rom	LI150Ax Bed by Hill-Rom Technical Manual	INT/E/LI150Ax/TECH 000

Revision number	Pages affected	Date
Original version	-	01/05/99

1. Introduction

Section Contents

Purpose of this manual 1-2

Who should use this manual 1-2

Organization of this manual 1-2

- Chapter 1: Introduction 1-2
- Chapter 2: Troubleshooting procedures ... 1-2
- Chapter 3: Theory of operation 1-2
- Chapter 4: Removal, replacement and adjustment procedures 1-2
- Chapter 5: Parts list 1-2
- Chapter 6: General procedures 1-2
- Chapter 7: Accessories 1-2

Typographical conventions used in this manual 1-2

- Glossary of Abbreviations 1-3
- Operating precautions 1-4
- Positions of the bed 1-4
- LI150Ax bed specifications 1-4
- General description 1-4
- Electrical Description 1-6
- Regulatory requirements 1-7

LI150Ax General operation 1-8

Siderail operation (accessories) 1-8

Bed positions 1-8

Model identification 1-10

CAUTION and WARNING texts 1-11

LI150Ax bed identification labels 1-12

Warning labels 1-13

Purpose of this manual

This manual provides the required information for maintenance of the LI150Ax Hill-Rom bed. It also includes a complete parts list for ordering replacement components This parts list is located in chapter 5.

WARNING

This manual gives a brief description of the LI150Ax bed functions, and does not supersede the User Manual, which describes the functions in detail. For more information on using the LI150Ax bed, please refer to the User Manual.

Who should use this manual

This Technical manual is intended to be used by facility authorized maintenance personnel only. Use by other than authorized maintenance personnel may result in severe damage to the equipment and/or severe injury for users.

Organization of this manual

This service manual contains seven chapters.

Chapter 1: Introduction

You are currently reading Chapter 1. This chapter defines the purpose of this manual as well as the persons for whom it is intended. Also included is the organization of the manual and an explanation of the various typographical conventions used. There is also an introduction to the product, specifications, model identification, safety tips and the warning and caution labels for the LI150Ax bed.

Chapter 2: Troubleshooting procedures

Chapter 2 contains the troubleshooting procedures for the LI150Ax bed. It also includes a troubleshooting introduction, initial actions, function checks, and repair analysis procedures.

Chapter 3: Theory of operation

Chapter 3 describes the theory of operation for the equipment of the LI150Ax bed. It also includes schematics and diagrams of the LI150Ax bed.

Chapter 4: Removal, replacement and adjustment procedures

Chapter 4 defines the removal, replacement and adjustment procedures for the LI150Ax bed components.

Chapter 5: Parts list

Chapter 5 contains the Hill-Rom warranty, defines the replacement part ordering procedure, exchange policy, illustrated parts list and general service information..

Chapter 6: General procedures

Chapter 6 contains cleaning and care, lubrication requirements, preventive maintenance and tool and supply requirements for the LI150Ax bed.

Chapter 7: Accessories

Chapter 7 includes available LI150Ax bed accessories, illustrations and mounting instructions.

Typographical conventions used in this manual

This manual contains different typographical conventions designed to enhance readability and understanding of its context. These conventions are the following:

- Standard text — used for standard text throughout the manual.
- **Boldface text**: emphasizes important words or phrases.
- **NOTE**: sets apart special information or important instruction clarification.
- The symbol below points out WARNING or CAUTION guidelines.

Figure 1-1. WARNING or CAUTION symbol

- A CAUTION guideline points out special procedures or precautions that service personnel must follow to avoid equipment damage.
- A WARNING guideline identifies situations or actions that may affect patient or user safety. Disregarding a WARNING guideline could result in patient or user injury.
- The symbol below highlights an electrical shock hazard warning:

Figure 1-2 -WARNING symbol (electrical shock hazard warning)

Glossary of Abbreviations

PCB ..... Printed Circuit Board
BC ..... Back Contact
LED ..... Light Emitting Diode
CF ..... Continuous Functioning
LS ..... Limit Switch
DM ..... Digital Multimeter
NC ..... Normally Closed
NO ..... Normally Open
TP ..... Test Point
S/A ..... Sub-Assembly
CW ..... Clock Wise
ACW ..... Anti Clock Wise
VAC ..... AC Voltage
VDC ..... DC Voltage
G/Y ..... Green/Yellow
HL ..... Hi Low
HS ..... Head Section
KS ..... Knee Section
SFS ..... Single Foot Section
T/RT ..... Trend/Reverse Trend
RS ..... Raise Switch
SHS ..... Sliding Head Section

Operating precautions

Before operating this bed, make sure you have read and understood in detail the contents of this manual. It is important that you read and strictly adhere to the safety information in this manual.It is also required to read the User Manual.

Positions of the bed

The LI150Ax bed has two or three adjustable sections according to the bed version: head, and leg or head, thigh and foot.

LI150Ax bed specifications

General description

Product	Features
Type	Hi-Low bed
Part Number	LI150Ax
Class	I IPX4 type B
Features	**Dimensions**
Overall length without extender	2176 mm (85.67")
Overall length with extender option (retracted)	2211 mm (87")
Overall length with extender option (extended)	2391 mm (94.1")
Overall width without siderails	970 mm (38.2")
Overall width with siderails	1040 mm (40.95")
Sleep surface height in low position (with O 125 casters)	436 mm (17.16")
Sleep surface height in low position (with O 150 casters)	457 mm (18")
Sleep surface height in high position (with O 125 casters)	762 mm (30")
Sleep surface height in high position (with O 150 casters)	783 mm (3.8")
Minimum space beneath the bed (O 125 casters)	165 mm (6.49")
Minimum space beneath the bed (O 150 casters)	186 mm (7.3")
Maximum Head Section angle	65
Maximum Knee /Foot Section angle	+36 /-10
Maximum Single Foot Section angle	20
Height of the siderail above sleep surface	415 mm (16.3")
Bed weight (without mattress or accessory)	133 kg (293.2lb)
Working load	170 kg (375 lb)
Maximum load lift	250 kg (551 lb)

Table 1-1 LI150Ax bed specifications

WARNING

Read the LI150Ax User Manual before using, in order to avoid injuring patients or users.

Head Section Inclination

The Head Section of the bed can be adjusted independently to obtain the required inclination of the bed, up to its limit which is approximately 65 . This function is activated using the flexible arm or the electrical function hand pendant.

Sliding Head Section

The LI150Ax bed is equipped with a Sliding Head Section.

The backward sliding of this section increases the sitting surface once it has been controlled to move to an upward position. A position such as this helps reduce pelvic pressure and shear forces, and allows the patient to breathe more easily.

Inclination of the Knee Section (optional, according to configuration)

The Foot Section Crank of the bed can be adjusted independently to obtain the required inclination, up to its limit which is approximately 36°. This function is activated using the flexible arm pendant or the electrical function hand pendant.

Hilow Functions

The bed can be adjusted to raise or lower the height of the sleep surface to position the patient or to facilitate bed ingress/egress. The Hilow Function can be adjusted by using the flexible arm, the electrical function hand pendant or the Hilow foot pedal.

Trendelenburg/ Reverse Trendelenburg (optional, according to configuration)

The sleep surface can be inclined in two ways,

- Reverse Trendelenburg (head of the bed in low position)
- Trendelenburg (foot of the bed in low position)

The maximum amplitude for Trendelenburg and Reverse Trendelenburg is obtained when the sleep surface is between mid-height and the highest position. The maximum angle in each position is 12°.

This function is operated using a handle located on the bed frame at the foot of the bed, assisted by two gas cylinders.

Inclination of the Foot Section

The foot section of the bed can be mechanically adjusted independently to obtain the required position, up to its limit which is approximately 36° to the plane of the thigh section, when the Knee Section is in high position. This function allows various angle positions and is manually activated by lifting or lowering it at the foot end of the bed.

The raising of the Knee Section causes an automatic inclination of the foot section of –10° to the plane of the thigh section.

Inclination of the Foot Section (bed with simple Foot Section)

The Foot Section of the bed can be adjusted independently to obtain the required position up to its limit which is approximately 20 . This function is manually activated by lifting or lowering it at the foot end of the bed.

Auto-contour mode (optional, according to configuration)

The auto-contour mode (optional, according to configuration) allows automatic raising of the Foot Section Crank of the bed up to an angle of approximately 18°, when the Head Section is raised from its horizontal position, and providing the operation of the Knee Section is not in locked position on the electrical function lockout unit.

Bed transport

The bed may be equipped with125 mm or 150 mm diameter casters (according to configuration). Anti-static casters are also available.

Steer function

The casters are located on the four corners of the base of the bed frame. When the brake/steer pedal is switched to steering position, the caster on the right head end of the bed (as seen by the patient laying in bed), or the left foot end caster (optional, according to configuration), is locked in the axis of the base to allow for bed guide steering when transporting or transferring a patient.

Braking

The 4 casters provide braking for the 150A bed.

Siderails (accessories)

The siderails (bed accessories) are fixed to each side of the LI150Ax bed. They can be raised and lowered independently using a manual control located at the foot and on both sides of the bed. When they are not in use, the siderails may be lowered or easily removed from the bed.

WARNING

Read the LI150Ax User Manual before operating the siderails, in order to avoid injuring patients or users.

Bumpers

The bumpers are located on the four corners of the bed frame.

CAUTION

Disassembly of the bumpers may damage the bed or surrounding equipment.

Monkey Pole receptacle

The bed is equipped with two receptacles for the accommodation of monkey poles. They are located on the head end corners of the bed frame. Each receptacle allows to install a fixed angle or swivel monkey pole (accessories).

IV ROD receptacle

The bed is equipped with four IV ROD receptacles. They are located on each side of the head end and in the center along the panels of the bed frame. Each receptacle accommodates an IV ROD (accessory).

Head and Foot panels

The Head and Foot panels are mounted in two vertical sockets located on each end of the bed and can be removed by lifting them vertically after having unlocked the handle lock mechanisms which are located under the Head and Footboard support at the four corners of the bed. These panels facilitate the movement and the steered transport of the bed.

Various types of Head and Footboards are available as an option according to configuration: chrome Head, or, as an option: Médiform, and sliding Headboards.

Drainage bag mounts

The bed is equipped with two urine bag mounts. These are located on each side of the bed below the sleep surface frame by the Seat Section.

Accessory bars (optional)

The bed may be equipped with accessory bars located either on the left or on the right hand side of the bed.

Side protection strips (optional, according to configuration)

The bed may be equipped with side protection strips in order to protect the bed from any possible collision. These are fixed on the left and right hand sides of the bed frame.

Electrical Description

WARNING

Electrical hazards associated with the use of electrical equipment concern safety hazards such as electrical shock. Staff should be adequately trained to work with electrical equipment and should be aware of the associated risks.

The LI150Ax bed functions on the 230V AC main supply with earth, 50 Hz, single phase.

The maximum power and current consumption of the bed are : 185 W / 0.9 A

Power unit characteristics : Class 1

Maximum power and current consumption : 220 W / 1 A

Maximum output power : 160 W.

Output voltage : 40v / 24 V DC.

The bed is intended for intermittent use : 10% 2mn/ 18mn.

The electrical circuit is mechanically isolated from the metallic parts of the bed.

Before delivery, all beds are factory tested for complete operation. Each bed is tested for isolation integrity and connection to ground. All beds must indicate less than 500 µA leakage current before shipment.

Control unit

The control unit allows electrical raising of the Head Section, of the Knee Section and the of the bed itself. The unit buttons are marked to indicate their function.

Flexible arm pendant (optional, according to configuration)

The flexible arm pendant is located on the left or the right hand corner of the Head Section. It can be fitted on to the bed as a replacement for the original control unit. The articulation of the arm and the rotation characteristic of up to 115° of the box which displays the different buttons, provides nursing staff as well as patients easy access to control the bed functions.

Hilow side pedal (optional)

The Hilow side pedal is located under the base and allows control of this function from either side of the bed. This pedal is very helpful to nursing staff when the patient is to be released from restraint, as hands are free during raising or lowering of the bed.

Function lockout unit

WARNING

Read the LI150Ax User Manual before using the function lockout unit for the first time.

The function lockout unit is located on the right or on the left of the bed. All switches have a label indicating the different functions and whether it is locked or unlocked using the closed lock (lock) and the open lock (unlock) symbols. A simplified lockout unit (1 switch) and a functional lockout unit (3 switches) are both available.

Motorized cylinders

Separate motorized cylinders allow for the operation of the Head Section, Foot Section Crank (according to model) and Hilow. They are designed to be resistant to possible spilt liquid products under normal use conditions. These cylinders are equipped with a connection socket providing easy disassembly (in case of a problem). Each cylinder carries out a specific function. The cylinder features are the following :

- Direct control of motor interruption by internal Limit Switches for the Head Section motor
- Motor interruption control by internal Limit Switches operated by the power unit for the Foot Section Crank and Hilow motors
- Waterproof and impact resistant motor unit
- Permanent lubrication

Specifications for motor cylinders are the following :

	HiLow (all models)	Head section (all models)	Foot Section Crank (according to configuration)
Manufacturer	DEWERT	DEWERT	DEWERT
Part number	MEGAMAT 6000N	MEGAMAT 1500N	MEGAMAT 4000N
Class	II	II	II
Power consumption	160 W	65 W	100 W
Voltage	24 V DC	24 V DC	24 V DC
Intermittent operation	10 % maxi. 2 min/18 min	10 % maxi. 2 min/18 min	10 % maxi. 2 min/18 min

Motor dimension features :

Hilow

- 230 mm (9.05") cylinder stroke
- 447 mm (17.59") retracted rod entraxe

Head Section

- 250 mm (9.84") cylinder stroke
- 491 mm (17.33") retracted rod entraxe

Foot Crank Section

- 60 mm (2.36") cylinder stroke
- 310 mm (12.2") retracted rod entraxe

CAUTION

The cycle of use (discontinuous operation) of the cylinders must not exceed 2mn/18mn. Otherwise, damage to equipment may occur.

Regulatory requirements

The LI150Ax bed must meet with the 93/42/CEE Council Directives.

CE

NF MEDICAL

The LI150Ax bed complies with the following standards:

NF EN 60601-1

NF EN 60601-2-38

NF EN 60601-1-2

NF S-90-312

LI150Ax General operation

Siderail operation (accessories)

WARNING :

Read the LI150Ax User Manual before operating the siderails, in order to avoid injuring patients or users.

To raise the siderails (accessories)

- Take the siderail by the handle and lift it. Then raise it to high position until the mechanism is locked. When it locks you should hear a "click".
- Check that it is locked by trying to lower the siderail.

To lower the siderails (accessories)

Note: the siderails designed for the LI150Ax bed are equipped with a double release safety mechanism which can be recognized by

"LIFT" on the handle and "PRESS" on the blue knob.

- Take the siderail handle and lift it ("LIFT"). Press the "PRESS" blue knob, and using the handle, lower the siderail into low position (until it stops).

WARNING

Check that there is nothing in the way (a person's limb, object, etc.) before lowering a siderail. Failure to do so may result in physical injury or material damage.

Bed positions

WARNING

One of the potential risks associated with the use of electrical equipment is electrical shock. Train and educate your staff on the inherent risks associated with electrical equipment.

WARNING

Read the LI150Ax User Manual before using, in order to avoid injuring patients or users.

Hilow function

To raise the sleep surface, press and hold the 'Raise' Hilow knob on the control box or on the satellite control panel, or press the corresponding arrow on the pedal. Release the knob or the pedal at the required height.

To lower the sleep surface, press and hold the 'Lower' Hilow knob on the control box or on the satellite control panel, or press the corresponding arrow on the pedal. Release the knob or the pedal at the required height.

Head Section

To raise the Head Section, press and hold the 'Raise' Head Section knob on the control box or on the satellite control panel. Release the knob at the required height.

To lower the Head Section, press and hold the 'Lower' Head Section knob on the control box or on the satellite control panel. Release the knob at the required height.

Knee Section (optional, according to configuration)

To raise the Knee Section , press and hold the 'Raise' Knee Section knob on the control box or on the satellite control panel. Release the knob at the required height.

To lower the Knee Section , press and hold the 'Lower' Knee section knob on the control box or on the satellite control panel. Release the knob at the required height.

Auto-contour mode (optional, according to configuration)

Lock the auto-contour mode as follows :

- Set the Foot Section Crank lockout switch to the locked position (lock shut).

Steering

WARNING :

When you move the bed, guide it by the corners of the foot end of the bed. This will keep the legs and feet of the caregiver clear of the base.

WARNING :

Set the brakes and always leave the bed in the low position when the patient is left unattended. The patient may use the bed for support when getting in and out of bed. To avoid any patient injuries, push the bed to make sure it is in brake position.

Put the bed in brake position by pressing the brake pedal(s) with your foot.

Release brakes by pressing the brake/steer pedal with your foot until it is in horizontal position.

Head, Thigh and Foot Section hard surfaces

To remove the head, thigh and foot section hard surfaces, lift them up from the bed frame. Put them in a safe place to avoid any damage.

To install the hard surfaces, hold them up in line with their location on the bed frame and lay them down.

Model identification

The LI150Ax bed is intended for international use. Using the LI150A0 basic version, other versions which are personalized according to country are manufactured through integration of functions according to the following rule :

a digit for optional Reverse Trendelenburg / Trendelenburg common nursing bed (LI150A1, LI150A2...)
a letter for standard Reverse Trendelenburg / Trundelenburg advanced nursing bed (LI150AA, LI150AB...)

Table 1.2 below describes the contents of each version (X = basic version, O = optional).

	LI150Ax	
	DESCRIPTION	**Basic version**
		LI150A0
	HVE	X
	HI LOW PEDAL HVE	O
	TRENDELENBURG / REVERSE TRENDELENBURG	O
BASE	SIDE COVER	O
	BRAKING CENTRALIZED ON 4 CASTERS.	X
	SINGLE ROLLER CASTERS Ø : 125	O
	DOUBLE ROLLER CASTERS Ø : 150	X
	ANTI-STATIC SINGLE ROLLER CASTERS Ø : 150	O
	S.B. CASTERS. Ø : 150 + 30° ANGLE BRAKE	O
	ANTI-STATIC S.B. CASTERS Ø : 150 + 30° ANGLE BRAKE	O
	DOUBLE BAND CASTERS Ø : 125	O
	ANTI-STATIC DOUBLE BAND CASTERS Ø : 150	O
	FOOT STEER CASTER	O
SLEEPING SURFACE	SLEEP SURFACE 90x200	X
	CLINIPLAN BED FRAME	X
	SLIDING HEAD SECTION	X
	ELECTRICAL KNEE SECTION	O
	ELECTRICAL AUTO-CONTOUR	O
	MECHANICAL FOOT SECTION	X
BED FRAME	MULTI-POSITION SLIDING HEAD SECTION CLUTCH	X
	QUICK-EXTRACT HEAD- AND FOOT BOARDS	X
	2 URINE BAG HOLDERS	X
	2 POLE DEVICES	X
	4 EGRESS BAR DEVICES + 2 head IV ROD devices	O
	4 IV ROD DEVICES	X
	ELECTRICAL LOCKOUT (1 SWITCH) ON THE PATIENT RIGHT HAND SIDE	X
	ELECTRICAL LOCKOUT (3 SWITCHES) ON THE PATIENT RIGHT HAND SIDE	O
	ELECTRICAL LOCKOUT (1 SWITCH) ON THE PATIENT LEFT HAND SIDE	O
	ELECTRICAL LOCKOUT (3 SWITCHES) ON THE PATIENT LEFT HAND SIDE	O
	CONTROL ON FLEXIBLE ARM	O
	LINEN HOLDER	O
	INTEGRATED BED EXTENSION	O
	PROTECTIVE BUMPERS	O
	ACCESSORY BARS	O
PANELS	SECOND TRENDELENBURG / REVERSE TRENDELENBURG HANDLE	O
	CHROME HEAD AND FOOT PANEL O : 32	X
	MEDIFORM HEAD AND FOOT PANEL	O
	SLIDING HEAD PANEL	O
	CHART HOLDER - FOOT END MONITOR HOLDER	O

CAUTION and WARNING texts

WARNING

This manual gives a brief description of the LI150Ax bed functions, and does not supersede the User Manual, which describes the functions in detail. For more information on using the LI150Ax bed, please refer to the User Manual.

WARNING

One of the potential risks associated with the use of electrical equipment is electrical shock. Train and educate your staff on the inherent risks associated with electrical equipment.

WARNING

Unplug the bed before any cleaning or maintenance. There is risk of electrical shock. Refer to the "User manual of bed LI150Ax" and to the specific chapters of this manual for further precaution.

WARNING

Unplug the unit from its power source before disconnecting the cables from the power unit. There is risk of electrical shock.

WARNING

The current flows around the connections when the bed is switched on. Technical personnel may be harmed if the bed is not unplugged from its power source.

WARNING

Personnel should never have their entire body below the sleep surface and within the confines of the bed. If service personnel need to get under the bed, they must use adequate supports to lock the bed frame.

WARNING

Set the brakes and always leave the bed in the low position when the patient is left unattended. The patient may use the bed for support when getting in and out of bed. To avoid any patient injuries, push the bed to make sure it is in brake position.

WARNING

Read the LI150Ax Bed User Manual before operating the siderails, in order to avoid injuring patients or users.

WARNING

Check that there is nothing in the way (a person's limb, object...) before lowering a siderail. Failure to do so may result in physical injury or material damage.

WARNING :

When you move the bed, guide it by the corners of the foot end of the bed. This will keep the legs and feet of the caregiver clear of the base.

WARNING

Read the LI150Ax Bed User Manual before operating the function lockout unit.

WARNING

Only facility authorized personnel should troubleshoot the 150Ax bed. Otherwise personal injury could occur.

WARNING

Only use the accessories mentioned for LI150Ax beds. The use of any other accessories may compromise the safety of the bed.

CAUTION

Disassembly of the protection stops may damage the bed or the equipment.

CAUTION

The cycle of use (discontinuous operation) of the cylinders must not exceed 2mn/18mn. Otherwise damage to equipment may occur.

CAUTION

Cleaning, disinfecting: conform to recommendations described in the LI150Ax Bed User Manual.

CAUTION

Do not use lubricant containing silicone anywhere on the LI150Ax bed. Otherwise, the self-lubricating qualities of the rollers and self-lubricating rings will be neutralized.

LI150Ax bed identification labels

LE COUVIOUR SA 56330 PLUVIGNER FRANCE
LI150xx xxxxxxx
00/00/00 xxxxxxx
LIT CLASSE 1 IPX4 TYPE B
230V ∿ 50HZ 185W MAX.
MOTEURS CLASSE II ⧈ 24V ⎓ IPX4
SERV. INTERMITTENT 2min/18min
CHARGE NORM. D'UTILISAT : 170KG
CHARGE MAXI SOULEVEE : 250KG

HILL ROM GROUP 56330 PLUVIGNER FRANCE
LI150xx xxxxxxx
00/00/00 xxxxxxx
CLASS 1 IPX4 B TYPE
230V ∿ 50HZ 185W MAX.
CLASS II MOTOR ⧈ 24V ⎓ IPX4
INTERMITTENT WORKING 2min/18min
NORMAL WORKING LOADS :170KG
MAXIMUM LIFT UP LOADS : 250KG

HILL ROM GRUPPE
56330 PLUVIGNER FRANKREICH
MODEL: LI150xx 002
HERST: -NR : xxxxxxx xxxxxxx
AC 230V 50HZ 185 W
KB 2 Min/18 Min 00/00/00
SHUTZKL.: 1 TYP B
SHUTZART MIN IPX4
SICHERE ARBEITLAST : 170KG

Warning labels

LIT NON DOTE DE FONCTION PROCLIVE DECLIVE
BED WITH NO TREND REVERSE MECHANISM
BETT OHNE ANTITRENDENLENBURG TRENDENLENBURG

Branchement recommande sur une instalation protegee par differentiel au plus egal a 30mA. Wir raten Das electrische Netz mit einem Frhlerstromshutzschalter von max.30mA auszurusten

Plug in to a recommended protected installation with a differential circuit breaker max. 30mA.

CHARGE MAXI.
MAX. LOAD **15KG**
MAX. BELASTUNG

CHARGE MAXI.
MAX. LOAD **25KG**
MAX. BELASTUNG

CHARGE MAXI.
MAX. LOAD **40KG**
MAX. BELASTUNG

CHARGE MAXI.
MAX. LOAD **80KG**
MAX. BELASTUNG

Notes :

2. Troubleshooting procedures

Section Contents

Getting started 2-2
Initial Actions 2-2
Function checks 2-3
Final Actions 2-4
2.1 Bed raising function not operating 2-4
2.2 Bed lowering function not operating ... 2-6
2.3 Raising function of the Head Section not operating 2-8
2.4 Lowering of the Head Section not operating 2-10
2.5 Raising of the Knee section (option) not operating 2-11
2.6 Lowering of the Knee Section (option) not operating 2-13
2.7 Auto contour function (option) not operating 2-14
2.8 Trendelenburg/Reverse Trendelenburg function (optional) not operating correctly 2-16
2.9 CPR function not operating correctly . 2-17

2

Getting started

Begin each procedure in this chapter with step 1. Follow the sequence outlined (each step assumes the previous steps are correct). Each step is the normal operational event of the product and can be confirmed by answering Y (yes) or N (no) to the statement. Your response will lead to another step in the procedure, a Repair and Analysis Procedure (**RAP**), or a component replacement, then refer to the corresponding procedure in chapter 4. If more than one component is listed, replace them in the order given.

Start with Initial Actions to begin gathering information about the problem.

Perform the **Function Checks** to isolate or identify a problem and to verify repair after completing each corrective action (replacing or adjusting a part, seating a connector, etc).

Perform Final Actions after the function checks to verify the repair.

If troubleshooting procedures do not isolate the problem, contact your national Hill Rom representative for assistance: see page II of this manual.

WARNING

Only facility authorized personnel should troubleshoot the LI150Ax bed.

Note: The suggested troubleshooting procedures are designed to limit the number of necessary spare parts and the cost of problem analysis as much as possible.

Initial Actions

The initial actions are used to gather information from operators concerning problems with the **LI150Ax** bed. Make note of symptoms or other information concerning the problem that the operator identifies. This information helps identify the probable cause.

1. Someone who can explain the problem is available.

Yes **No**

⇩ ⇨ Go to " Function Checks " on page 2.3

2. Ask this person to demonstrate or explain the problem. The problem can be duplicated.

Yes **No**

⇩ ⇨ Go to " Function Checks " on page 2.3

3. The problem is a result of improper operation.

Yes **No**

⇩ ⇨ Go to " Function checks " on page 2.3

4. Tell the operators to refer to the manual operation procedures of the **LI150Ax** bed. Carry out the "Function Checks" on page 2.3 to make sure the **LI150Ax** bed is put to proper use.

Function checks

WARNING

Read the LI150Ax User Manual before checking the functions, in order to avoid injury for patients or users.

1. Release all functions.

   The initial actions have been completed.

   Yes **No**

   ⇩ ⇨ Go to "Initial actions" on page 2-2

2. Press the "UP" knob of the "Hilow" function.

   The bed raises normally.

   Yes **No**

   ⇩ ⇨ Go to **RAP 2.1** on page 2-4

3. Press the "DOWN" knob of the "Hilow" function.

   The bed lowers normally.

   Yes **No**

   ⇩ ⇨ Go to **RAP 2.2** on page 2-6

4. Press the "UP" knob of the "Head Section" function (do not consider the "Knee Section ").

   The Head Section raises normally.

   Yes **No**

   ⇩ ⇨ Go to **RAP 2.3** on page 2-8

5. Press the "DOWN" knob of the "Head Section" function (do not consider the "Knee Section ").

   The Head Section lowers normally.

   Yes **No**

   ⇩ ⇨ Go to **RAP 2.4** on page 2-10

6. Press the "UP" knob of the "Knee Section " function.

   The Section raises normally.

   Yes **No**

   ⇩ ⇨ Go to **RAP 2.5** on page 2-11

7. Press the "DOWN" knob of the "Knee Section " function.

   The Knee Section lowers normally.

   Yes **No**

   ⇩ ⇨ Go to **RAP 2.6** on page 2-13

8. Beds with auto-contour option: press the "UP" knob of the "Head Section" function when the bed frame is horizontal.

   The Head Section and the Knee Section raise simultaneously, then the Knee Section stops at an angle of 18° while the Head Section continues to raise up to its highest position.

   Yes **No**

   ⇩ ⇨ Go to **RAP 2.7** on page 2-14

9. Beds with auto-contour option: press the "DOWN" knob of the "Head Section" function when the Head Section is in its highest position.

   The Head Section and the Knee Section lower to their horizontal positions.

   Yes **No**

   ⇩ ⇨ Go to **RAP 2.7** on page 2-14

10. Bed with Trendelenburg / Reverse Trendelenburg option: raise the bed to high position and activate the Trendelenburg and then the Reverse Trendelenburg.

    The bed progressively swings to Trendelenburg and then to Reverse Trendelenburg without difficulty or abnormal noise.

    Yes **No**

    ⇩ ⇨ Go to **RAP 2.8** on page 2-16

11. Bed with Trendelenburg / Reverse Trendelenburg option: raise the bed to high position and activate the Trendelenburg, and then press the "DOWN" knob of the "*Hi Low" function.

    The bed frame starts to lower and then stops upon contact with the Trendelenburg limit switch without excessive stress on the base.

    Yes **No**

    ⇩ ⇨ Go to **RAP 2.8** on page 2-16

12. Press the "UP" knob of the Head Section until the Head Section is in high position. Activate the CPR handle (emergency flattening of the Head Section).

    The Head Section lowers quickly without difficulty or abnormal noise.(Warning: there is a damper to limit the lowering speed)

    Yes **No**

    ⇩ ⇨ Go to **RAP 2.9** on page 2-17

Go to "Final Actions" page 2-4

Final Actions

1. Carry out the required preventive maintenance procedures. Refer to "Preventive Maintenance" in chapter 6 of this manual.
2. Carry out all required administrative tasks.

2

Appendix 1

- Refer to the diagram in chapter 3 to locate the electrical system cables of the power unit.
- To gain access to the power unit terminals, unclip the power unit cover then unclip the two clips on the switch lockout cover, without removing them, and remove the cover.

Appendix 2

- Two persons are necessary to complete the test.

2.1 Bed raising function not operating

1. Check that the lockout switch(es) is/are in the "Unlock" position (lock open).

   The switch(es) is/are set to the correct position.

   Yes **No**

   ⇩ ⇨ Set the switch(es) to the correct position. If this solves the problem, repeat the "Function checks" at the beginning of this chapter.

2. **At least one of the other functions is operating.**

   Yes **No**

   ⇩ ⇨ Go to step 3.

   Go to step 4.

3. Check the 220/240 V AC main supply on the wall socket with a voltmeter set to AC position.

   There is a supply of 220/240V from the wall socket.

   Yes **No**

   ⇩ ⇨ Repair the wall socket and repeat the "Function checks" at the beginning of this chapter.

4. **Control test**: Disconnect the 7-pin socket N°5 from the power unit. See Appendix 1, page 2-4. Measure the resistance between terminals 1 and 2 (see figure 1) with an ohmmeter (see Appendix 2).

   The displayed value is less than 5 ohms (hand pendant) or 100 ohms (flexible arm pendant) when pressing the "UP" knob, and infinite when released.

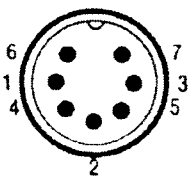

7-pin

Figure 1

Yes **No**

⇩ ⇨ If the bed is equipped with a flexible arm pendant go to step 5, otherwise replace the hand pendant and repeat the "Function checks" at the beginning of this chapter.

Go to step 6.

5. Loosen the 4 screws holding the flexible arm pendant, disconnect the keyboard from the inside (warning: intermediate connector) and measure the resistance between keyboard terminals 3 and 7 (N on the keyboard connector).

   The resistance is less than 400 ohms when pressing the knob to raise the bed, and infinite when the knob is released.

   Yes **No**

   ⇩ ⇨ Replace the flexible arm pendant keyboard and repeat the "Function checks" at the beginning of this chapter.

   Replace the flexible arm pendant cable and repeat the "Function checks" at the beginning of this chapter.

6. **The bed is equipped with a Hilow pedal (optional).**

   Yes **No**

   ⇩ ⇨ Go to step 10.

7. **Pedal test**: Disconnect the 5-pin socket N°4 from the power unit. See Appendix 1, page 2-4. Measure the resistance between terminals 1 and 2 (see figure 2) with an ohmmeter.

   The displayed value is less than 1 ohm when pressing the HL raise pedal, and infinite when released.

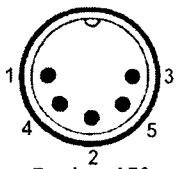

5-pin, 45°

Figure 2

   Yes **No**

   ⇩ ⇨ Go to step 5.

   Go to step 10

8. After having checked that there are no parts missing to operate the pedal switch, measure the resistance between the terminals of the bed, raise switch R.S. with an ohmmeter (the unit housing the HL switches must be disassembled). These terminals are located under the bed, next to the pedal (black and red wires, see fig 3).

   The displayed value is less than 1 ohm when pressing the pedal, and infinite when released.

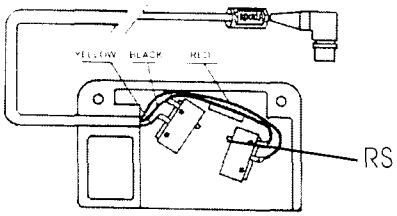

Figure 3

   Yes **No**

   ⇩ ⇨ Replace the switch, and repeat the "Function checks" at the beginning of this chapter.

9. Check for a small nipple on the end of the bed raising switch contact (see lowering switch).

   There is a nipple.

   Yes **No**

   ⇩ ⇨ Replace the switch and repeat the "Function checks" at the beginning of this chapter

   Replace the pedal cable and repeat the "Function checks" at the beginning of this chapter

10 **Lockout test: The bed is equipped with a Single selection lockout control box (one switch per function).**

   Yes **No**

   ⇩ ⇨ Go to step 11.

   Go to step 12.

11. Disconnect the 7-pin socket N°6 from the power unit. See Appendix 1, page 2-4. Measure the resistance between terminals 1 and 3 (see figure 1) with an ohmmeter.

   The displayed value is less than 1 ohm.

   Yes **No**

   ⇩ ⇨ Replace the lockout control box and repeat the "Function checks" at the beginning of this chapter.

   Go to step 13.

12. Disconnect the 7-pin socket N°6 from the power unit. See Appendix 1, page 2-4. Measure the voltage between terminals 5 and 3, with a multimeter adjusted to "diode test" position, with the + sensor on terminal 5 and the - sensor on terminal 3.

   The displayed value is between 0.4 and 0.7 Volt.

   Yes **No**

   ⇩ ⇨ Replace the lockout control box and repeat the "Function checks" at the beginning of this chapter.

2

13. **Motor test: The bed is equipped with an electrical Knee Section which is operating correctly.**

Yes **No**

⇩ ⇨ Go to step 14.

Disconnect the 7-pin sockets N 2 and N 3 from the power unit. See Appendix 1, page 2-4. Connect the socket (n° 1) of the Hilow motor to the power unit input n° 3, then complete a raising and lowering cycle of the bed by pressing the "UP" and "DOWN" knobs of the Knee Section function.

The motor operates correctly.

Yes **No**

⇩ ⇨ Go to step 14.

Go to step 15.

14. Connect a new motor to the power unit input n° 1, then complete a raising and lowering cycle of the bed by pressing the Hilow function knobs.

The motor operates correctly.

Yes **No**

⇩ ⇨ Go to step 15.

Install a new motor on the bed, then repeat the "Function checks" at the beginning of this chapter. If any problem persists contact your national HILL ROM representative.

15. Replace the power unit.

This solves the problem.

Yes **No**

⇩ ⇨ Contact your national HILL ROM representative.

Repeat the "Function checks" at the beginning of this chapter.

2.2 Bed lowering function not operating

1. Check that the lockout switch(es) is/are set to the "Unlocked" position (lock open).

The switch(es) is/are set to the correct position.

Yes **No**

⇩ ⇨ Set the switch(es) to the correct position. If this solves the problem, repeat the "Function checks" at the beginning of this chapter.

2. **At least one of the other functions is operating.**

Yes **No**

⇩ ⇨ Go to step 3.

Go to step 4.

3. Check the 220/240 V AC main supply on the wall socket with a voltmeter set to AC position.

220/240 V supplied by the wall socket.

Yes **No**

⇩ ⇨ Repair the wall socket and repeat the "Function checks" at the beginning of this chapter.

4. **Control test**: Disconnect the 7-pin socket N° 5 from the power unit. See Appendix 1, page 2-4. Measure the resistance between terminals 1 and 4 (see figure 1) with an ohmmeter (see appendix 2).

The displayed value is less than 5 ohms (control box) or 100 ohms (flexible arm pendant) when pressing the knob to lower the bed, and infinite when releasing it.

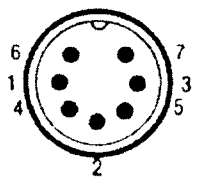

7-pin

Figure 1

Yes **No**

⇩ ⇨ If the bed is equipped with a flexible arm pendant, go to step 5, otherwise replace the hand pendant and repeat the "Function checks" at the beginning of this chapter.

Go to step 6.

5. Loosen the 4 screws holding the flexible arm pendant, disconnect the keyboard from the inside (warning: intermediate connector) and measure the resistance between keyboard terminals 4 and 7 (N° on the keyboard connector).

   The resistance is less than 100 ohms when pressing the knob to lower the bed, and infinite when released.

Yes **No**

⇩ ⇨ Replace the flexible arm pendant keyboard and repeat the "Function checks" at the beginning of this chapter.

Replace the flexible arm pendant cable and repeat the "Function checks" at the beginning of this chapter.

6. **The bed is equipped with a Hilow pedal (optional).**

Yes **No**

⇩ ⇨ Go to step 10.

7. **Pedal test**: Disconnect the 5-pin socket N°4 from the power unit. See Appendix 1, page 2-4. Measure the resistance between terminals 1 and 4 (see figure 2) with an ohmmeter.

   The displayed value is less than 1 ohm when pressing the HL Lower pedal, and infinite when released.

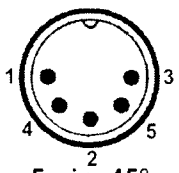

5-pin, 45°

Figure 2

Yes **No**

⇩ ⇨ Go to step 5.

Go to step 10

8. After having checked that no parts are missing to operate the pedal switch, measure the resistance between the terminals of the bed lowering LS switch with an ohmmeter (the unit housing the HL switches must be disassembled). These terminals are located under the bed near the pedal (black and yellow wires, see fig 3).

   The displayed value is less than 1 ohm when pressing the pedal, and infinite when released.

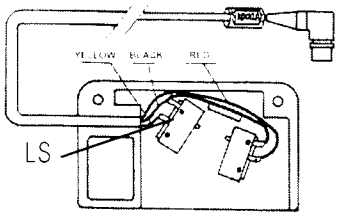

Figure 3

Yes **No**

⇩ ⇨ Replace the switch and repeat the "Function checks" at the beginning of this chapter.

9. Check for a small nipple on the end of the bed raising switch contact (see lowering switch).

   There is a nipple.

Yes **No**

⇩ ⇨ Replace the switch and repeat the "Function checks" at the beginning of this chapter.

Replace the pedal cable and repeat the "Function checks" at the beginning of this chapter

10. **Lockout test: The bed is equipped with a Single selection lockout control box (one switch per function).**

Yes **No**

⇩ ⇨ Go to step 11.

Go to step 12.

11. Disconnect the 7-pin socket N°6 from the power unit. See appendix 1 page 2-4. Measure the resistance between terminals 1 and 3 (see figure 1) with an ohmmeter.

    The displayed value is less than 1 ohm.

Yes **No**

⇩ ⇨ Replace the lockout control box and repeat the "Function checks" at the beginning of this chapter.

Go to step 13.

12. Disconnect the 7-pin socket N°6 from the power unit. See Appendix 1, page 2-4. Measure the voltage between terminals 5 and 3, with a multimeter adjusted to "diode test" position, with the + sensor on terminal 5 and the - sensor on terminal 3.

    The displayed value is between 0.4 and 0.7 Volt.

Yes **No**

⇩ ⇨ Replace the lockout control box and repeat the "Function checks" at the beginning of this chapter.

2

13. **Motor test : The bed is equipped with an electrical Knee Section which is operating correctly.**

Yes **No**

⇩ ⇨ Go to step 14.

Disconnect the 7-pin socket N 2 and N 3 from the power unit. See appendix 1 page 2-4. Connect the socket (n 1) of the Hilow motor to the power unit input n 3, then complete a raising and lowering cycle of the bed by pressing the "UP" and "DOWN" knobs of the Knee Section function.

The motor operates correctly.

Yes **No**

⇩ ⇨ Go to step 14.

Go to step 15.

14. Connect a new motor to the power unit input n°1, then complete a raising and lowering cycle of the bed by pressing the Hilow function knobs.

The motor operates correctly.

Yes **No**

⇩ ⇨ Go to step 15.

Install the new motor on the bed, then repeat the "Function checks" at the beginning of this chapter. If any problem persists contact your national HILL ROM representative for service.

15. Replace the power unit.

The problem is solved.

Yes **No**

⇩ ⇨ Contact your national HILL ROM representative for service.

Repeat the "Function checks" at the beginning of this chapter.

2.3 Raising function of the Head Section not operating

1. Check that the lockout switch(es) is/are set to the "Unlocked" position (lock open).

The switch(es) is/are in the correct position

Yes **No**

⇩ ⇨ Set the switch(es) to the correct position. If this solves the problem, repeat the "Function checks" at the beginning of this chapter.

2. **At least one of the other functions is operating**

Yes **No**

⇩ ⇨ Go to step 3.

Go to step 4.

3. Check the 220/240 V AC main supply on the wall socket with a voltmeter set to AC position.

220/240 V supllied by the wall socket

Yes **No**

⇩ ⇨ Repair the wall socket and repeat the "Function checks" at the beginning of this chapter.

4. **HL function test** : Complete a raising and lowering cycle of the bed by pressing the "UP" and "DOWN" buttons on the control box.

The bed raises and lowers correctly

Yes **No**

⇩ ⇨ Perform **RAP 2.1** and repeat the "Function checks" at the beginning of this chapter..

5. **Test the controls** : Disconnect the 7 pin socket N°5 from the power unit. See appendix 1 page 2-4. Measure the resistance between terminals 1 and 3 (see figure 1) using an ohmmeter (see appendix 2).

The displayed value is less than 5 ohms (control box) or 400 ohms (flexible arm pendant) when pressing the button to raise the Head Section and infinite when released.

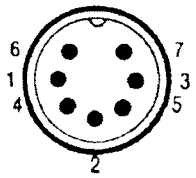

7-pin

Figure 1

Yes **No**

⇩ ⇨ If the bed is equipped with a flexible arm pendnant go to step 6, otherwise replace the control box and repeat the "Function checks" at the beginning of this chapter.

Go to step 7.

6. Loosen the 4 screws holding the flexible arm pendant, disconnect the keyboard from the inside (warning : intermediate connector) and measure the resistance between keyboard terminals 5 and 7 (N° on the keyboard connector).

   The resistance is less than 100 ohms when pressing the button to raise the Head Section and infinite when released

Yes **No**

⇩ ⇨ Replace the flexible arm keyboard and repeat the "Function checks" at the beginning of this chapter.

Replace the flexible arm cable and repeat the "Function checks" at the beginning of this chapter.

7. ***Lockout test : The bed is equipped with a* Single selection lockout control box** (one switch per function)

Yes **No**

⇩ ⇨ Go to step 9.

8. Disconnect the 7 pin socket N°6 from the power unit. See appendix 1 page 2-4. Measure the voltage between terminals 6 and 3, using a multimeter adjusted to "diode test" position, with the + sensor on terminal 6 and the - sensor on terminal 3.

   The displayed value is between 0.4 and 0.7 Volt

Yes **No**

⇩ ⇨ Replace the lockout control box and repeat the "Function checks" at the beginning of this chapter.

9. **HS motor test** : Disconnect the 7 pin socket N° 2 from the power unit. See appendix 1 page 2-4. Connect a new head Section motor to the input n° 2 of the power unit.

   The motor operates correctly

Yes **No**

⇩ ⇨ Go to step 10.

Install a new motor on the bed then carry out a test with a load. If any problem persists go to step 10 otherwise repeat the "Function checks" at the beginning of this chapter.

10. Replace the power unit.

    The problem is solved

Yes **No**

⇩ ⇨ Contact your national HILL ROM representative for service.

Repeat the "Function checks" at the beginning of this chapter.

2

2.4 Lowering of the Head Section not operating

1. Check that the lockout switch(es) is/are in the "Unlocked" position (lock open).

   The switch(es) is/are in the correct position.

   Yes **No**

   ⇩ ⇨ Put the switch(es) in the correct position. If it solves the problem, repeat the "Function checks" at the beginning of this chapter.

2. At least one of the other functions is operating

   Yes **No**

   ⇩ ⇨ Go to step 3.

   Go to step 4.

3. Check the 220/240 V AC main supply on the wall socket using a voltmeter set in AC position.

   220/240 V supplied by the wall socket.

   Yes **No**

   ⇩ ⇨ Repair the wall socket and repeat the "Function checks" at the beginning of this chapter.

4. **HL test function**: Complete a raising and lowering cycle of the bed by pressing the "UP" and "DOWN" buttons of the control box.

   The bed raises and lowers correctly.

   Yes **No**

   ⇩ ⇨ Perform the **RAP 2.1** and then repeat the "Function checks" at the beginning of this chapter..

5. **Test the controls**: Disconnect the 7 pin socket N°5 from the power unit. See appendix 1, page 2-4. Measure the resistance between terminals 1 and 5 (see figure 1) with an ohmmeter (see appendix 2).

   The displayed value is less than 5 ohms (control box) or 400 ohms (flexible arm pendant) when pressing the button to lower the Head Section and infinite when released.

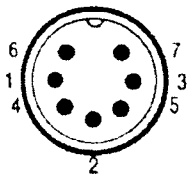

7-pin

Figure 1

   Yes **No**

   ⇩ ⇨ If the bed is equipped with a flexible arm pendant go to step 6, otherwise replace the control box and repeat the "Function checks" at the beginning of this chapter.

   Go to step 7.

6. Loosen the 4 screws holding the flexible arm pendant, disconnect the keyboard on the inside (note : intermediate connectors exist) and measure the resistance between keyboard terminals 6 and 7 (N° on the keyboard connector).

   The resistance is less than 100 ohms when pressing the button to lower the Head Section and infinite when released

   Yes **No**

   ⇩ ⇨ Replace the flexible arm keyboard and repeat the "Function checks" at the beginning of this chapter.

   Replace the flexible arm cable and repeat the "Function checks" at the beginning of this chapter.

7. **Lockout control test : The bed is equipped with a Single selection lockout control box (one switch per function)**

   Yes **No**

   ⇩ ⇨ Go to step 9.

8. Disconnect the 7 pin socket N°6 from the power unit. See appendix 1, page 2-4. Measure the voltage between terminals 6 and 3 on the lockout control box, using a multimeter adjusted to "diode test" position (see figure 1), with the + sensor on terminal 6 and the - sensor on terminal 3.

   The displayed value is between 0.4 and 0.7 Volt

   Yes **No**

   ⇩ ⇨ Replace the lockout control box and repeat the "Function checks" at the beginning of this chapter.

9. **HS motor test**: Disconnect the 7 pin socket N 2 from the power unit. See appendix 1, page 2-4. Connect a new Head Section motor to the input n 2 of the power unit.

   The motor operates correctly.

   Yes **No**

   ⇩ ⇨ Go to step 10.

   Install a new motor on the bed, then test with load. If any problem persists go to step 10, otherwise repeat the "Function checks" at the beginning of this chapter.

10. Replace the power unit.

    This solves the problem.

    Yes No

    ⇩ ⇨ Contact your national HILL ROM representative for service.

    Repeat the "Function checks" at the beginning of this chapter.

2.5 Raising of the Knee section (option) not operating

1. Check that the lockout switch(es) is/are in the "Unlocked" position (lock open).

   The switch(es) is/are in the correct position.

   Yes **No**

   ⇩ ⇨ Set the switch(es) to the correct position. If it solves the problem, repeat the "Function checks" at the beginning of this chapter.

2. At least one of the other functions is operating.

   Yes **No**

   ⇩ ⇨ Go to step 3.

   Go to step 4.

3. Check the 220/240 V AC main supply on the wall socket with a voltmeter set in AC position.

   220/240 V supplied by the wall socket.

   Yes **No**

   ⇩ ⇨ Fix the wall socket and repeat the "Function checks" at the beginning of this chapter.

4. **HL test function**: Complete a raising and lowering cycle of the bed by pressing the "UP" and "DOWN" buttons on the control box.

   The bed raises and lowers correctly.

   Yes **No**

   ⇩ ⇨ Perform **RAP 2.1** and then the "Function checks" at the beginning of this chapter..

5. **Test the controls**: Disconnect the 7 pin socket N°5 from the power unit. See appendix 1 page 2-4. Measure the resistance between terminals 1 and 6 (see figure 1) with an ohmmeter (see appendix 2).

   The displayed value is less than 5 ohms (control box) or 100 ohms (flexible arm pendant) when pressing the button to raise the Knee Section and infinite when releasing it.

2

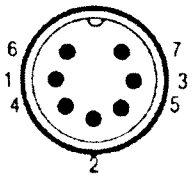

7-pin

Figure 1

Yes **No**

⇩ ⇨ If the bed is equipped with a flexible arm go to step 6, otherwise replace the control box and repeat the "Function checks" at the beginning of this chapter.

Go to step 7.

6. Loosen the 4 screws holding the flexible arm, disconnect the keyboard from the inside (warning : intermediate connector) and measure the resistance between keyboard terminals 2 and 7 (N° on the keyboard connector).

   The resistance is less than 100 ohms when pressing the button to raise the Knee Section and infinite when releasing it.

Yes **No**

⇩ ⇨ Replace the flexible arm keyboard and repeat the "Function checks" at the beginning of this chapter.

Replace the flexible arm cable and repeat the "Function checks" at the beginning of this chapter.

7. **The bed is equipped with a Single selection lockout control box (one switch per function).**

Yes **No**

⇩ ⇨ Go to step 9.

8. Disconnect the 7 pin socket N°5 from the power unit. See appendix 1 page 2-4. Measure the voltage between terminals 7 and 3, with a multimeter adjusted to "diode test" position, with the + sensor on terminal 7 and the - sensor on terminal 3.

   The displayed value is between 0.4 and 0.7 Volt.

Yes **No**

⇩ ⇨ Replace the lockout control box and repeat the "Function checks" at the beginning of this chapter.

9. Disconnect the 7 pin socket N 2 and N 3 from the power unit. See appendix 1 page 2-4. Connect the socket (n 3) of the Foot Section Crank motor to the power unit input n 1, then complete a raising and lowering cycle of the bed by pressing the "UP" and "DOWN" buttons on the control box.

   The motor operates correctly.

Yes **No**

⇩ ⇨ Go to step 10.

Go to step 11.

10. Connect a new motor to the power unit input n 3, then complete a raising and lowering cycle of the Knee Section by pressing the appropriate buttons.

    The motor operates correctly.

Yes **No**

⇩ ⇨ Go to step 11.

Install the new motor on the bed, then repeat the "Function checks" at the beginning of this chapter. If any problem persists contact your national HILL ROM representative for service.

11. Replace the power unit.

    The problem is solved.

Yes **No**

⇩ ⇨ Contact your national HILL ROM representative for service.

Repeat the "Function checks" at the beginning of this chapter.

2.6 Lowering of the Knee Section (option) not operating

1. Check that the lockout switch(es) is/are in the "Unlocked" position (open lock).

   The switch(es) is/are in the correct position.

   Yes **No**

   ⇩ ⇨ Set the switch(es) to the correct position. If it solves the problem, repeat the "Function checks" at the beginning of this chapter.

2. At least one of the other functions operating

   Yes **No**

   ⇩ ⇨ Go to step 3.

   Go to step 4.

3. Check the 220/240 V AC main supply on the wall socket with a voltmeter set in AC position.

   220/240 V supplied by the wall socket.

   Yes **No**

   ⇩ ⇨ Repair the wall socket and repeat the "Function checks" at the beginning of this chapter.

4. Complete a raising and lowering cycle of the bed by pressing the "UP" and "DOWN" buttons of the control box.

   The bed raises and lowers correctly.

   Yes **No**

   ⇩ ⇨ Perform **RAP 2.1** and then the "Function checks" at the beginning of this chapter..

5. Disconnect the 7 pin socket N°5 from the power unit. See appendix 1 page 2-4. Measure the resistance between terminals 1 and 7 (see figure 1) using an ohmmeter (see appendix 2).

   The displayed value is less than 5 ohms (control box) or 100 ohms (flexible arm pendant) when pressing the button to lower the Knee Section and infinite when released.

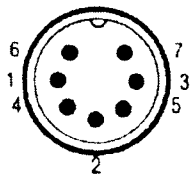

7-pin

Figure 1

   Yes **No**

   ⇩ ⇨ If the bed is equipped with a flexible arm pendant go to step 6, otherwise replace the control box and repeat the "Function checks" at the beginning of this chapter.

   Go to step 7.

6. Loosen the 4 screws holding the flexible arm pendant, disconnect the keyboard from the inside (warning: intermediate connector) and measure the resistance between keyboard terminals 5 and 7 (N° on the keyboard connector).

   The resistance is less than 100 ohms when pressing the button to lower the Knee Section and infinite when released.

   Yes **No**

   ⇩ ⇨ Replace the flexible arm keyboard and repeat the "Function checks" at the beginning of this chapter.

   Replace the flexible arm cable and repeat the "Function checks" at the beginning of this chapter.

7. **The bed is equipped with a Single selection lockout control box (one switch per function).**

   Yes **No**

   ⇩ ⇨ Go to step 9.

8. Disconnect the 7 pin socket N°6 from the power unit. See appendix 1 page 2-4. Measure the voltage between terminals 7 and 3, using a multimeter adjusted to "diode test" position, with the + sensor on terminal 7 and the - sensor on terminal 3.

   The displayed value is between 0.4 and 0.7 Volt.

   Yes **No**

   ⇩ ⇨ Replace the lockout control box and repeat the "Function checks" at the beginning of this chapter.

2

9. Disconnect the 7 pin sockets N 1 and N 3 from the power unit. See appendix 1 page 2-4. Connect the socket (n 3) of the Foot Section crank motor to the power unit input n 1, then complete a raising and lowering cycle of the motor by pressing the "UP" and "DOWN" buttons of the Hilow function.

   The motor operates correctly.

   Yes **No**

   ⇩ ⇨ Go to step 10.

   Go to step 11.

10. Connect a new motor to the power unit input n°3, then complete a raising and lowering cycle of the Knee Section by pressing the appropriate buttons.

    The motor operates correctly.

    Yes **No**

    ⇩ ⇨ Go to step 11.

    Install the new motor on the bed, then repeat the "Function checks" at the beginning of this chapter. If any problem persists contact your national HILL ROM representative for service.

11. Replace the power unit.

    The problem is solved.

    Yes **No**

    ⇩ ⇨ Contact your national HILL ROM representative for service.

    Repeat the "Function checks" at the beginning of this chapter.

2.7 Auto contour function (option) not operating

1. Make sure that the bed is equipped with a power unit allowing auto contour operation (see reference in chapter 5).

   The bed is equipped with the appropriate power unit.

   Yes **No**

   ⇩ ⇨ The auto contour function is therefore not available. If it is required, replace the power unit with the appropriate model: see reference in chapter 5.

2. Check that the lockout switch(es) is/are in the "unlocked" position (lock open).

   The switch(es) is/are in the correct position.

   Yes **No**

   ⇩ ⇨ Set the switch(es) to their correct positions. If any problem persists, repeat the "Function checks" at the beginning of this chapter.

3. **KS function test**: Press the "UP" button of the Knee Section function.

   The Knee Section raises normally and stops in high position.

   Yes **No**

   ⇩ ⇨ Go to **RAP 2.5**.

4. Press the "DOWN" button of the "Knee Section " function.

   The Knee Section lowers normally and stops in low position.

   Yes **No**

   ⇩ ⇨ Go to **RAP 2.6**.

5. **HS function test**: Press the "UP" button of the Head Section" function (do not consider the Knee Section).

   The Head Section raises normally and stops in high position.

   Yes **No**

   ⇩ ⇨ Go to **RAP 2.3**.

6. Press the "DOWN" button of the Head Section" function (do not take the Knee Section into account).

   The Head Section lowers normally and stops in low position.

   Yes **No**

   ⇩ ⇨ Go to **RAP 2.4**.

7. **HL function test**: Press the "UP" button of the "Hilow" function.

   The bed raises normally and stops in high position.

   Yes **No**

   ⇩ ⇨ Go to **RAP 2.1**.

8. Press the "DOWN" button of the "Hilow" function.

   The bed lowers normally and stops in low position.

   Yes **No**

   ⇩ ⇨ Go to **RAP 2.2**.

9. **Power unit test**: Disconnect the 7 pin sockets n°1 and 3 from the power unit. See Appendix 1 page 2-4. Connect the Hilow motor socket (n°1) to the input n°3 on the power unit, then press the "UP" button of the Head Section.

   The Head Section and the bed raise simultaneously, then the bed stops raising after a few seconds whilst the Head Section continue to raise up to its high position.

   Yes **No**

   ⇩ ⇨ Go to step 14.

10. Press the "DOWN" button of the Head Section.

    The Head Section and the bed lower simultaneously until they are both in low position.

    Yes **No**

    ⇩ ⇨ Go to step14.

11. **KS motor test**: Connect a new Knee Section motor to the input n°3 of the power unit then press the "UP" button of the Head Section when it is in low position.

    The Head Section and the Knee Section raise simultaneously, then the latter stops after a few seconds whilst the Head Section continues to raise up to its high position.

    Yes **No**

    ⇩ ⇨ Go to step 13.

    Install the new motor on the bed, then repeat the "Function checks" at the beginning of this chapter. If any problem persists, contact your national HILL ROM representative for service.

12. Press the "DOWN" button of the Head Section.

    The Head Section and Knee Section lower simultaneously until they are in low position.

    Yes **No**

    ⇩ ⇨ Go to step 13.

    Install the new motor on the bed, then repeat the "Function checks" at the beginning of this chapter. If any problem persists, contact your national HILL ROM representative for service.

13. Replace the power unit.

    This solves the problem.

    Yes **No**

    ⇩ ⇨ Contact your national HILL ROM representative for service.

    Repeat the "Function checks" at the beginning of this chapter.

14. Replace the power unit.

    This solves the problem.

    Yes **No**

    ⇩ ⇨ Go to step 15

    Repeat the "Function checks" at the beginning of this chapter.

15. Re-install the power unit and replace the Head Section motor.

    This solves the problem.

    Yes **No**

    ⇩ ⇨ Contact your national HILL ROM representative for service.

    Repeat the "Function checks" at the beginning of this chapter.

2

2.8 Trendelenburg/Reverse Trendelenburg function (optional) not operating correctly

1. Check that the lockout switch(es) is/are in "unlocked" position (lock open).

   The switch(es) is/are set to the correct position

   Yes **No**

   ⇩ ⇨ Set the switch(es) to the correct position(s), then go to step 2..

2. Press the "UP" knob to raise the bed until the bed frame is in high position.

   The bed frame raises normally and stops in high position.

   Yes **No**

   ⇩ ⇨ Go to **RAP 2.1**.

3. Remove the hard surface of the bed frame. Check that the screws, latches, Truarc rings or shafts are not damaged or missing on the handle or Trendelenburg/Reverse Trendelenburg mechanism (refer to assembly diagrams in chapter 5).

   No screw, latch, ring or shaft is damaged or missing.

   Yes **No**

   ⇩ ⇨ Replace the missing or damaged parts, then go to the "Function checks" on page 2.3.

4. Check that the cable is not broken and has not been damaged.

   The cable is in good condition.

   Yes **No**

   ⇩ ⇨ Replace the cable, then go to the "Function checks" at the beginning of this chapter.

5. Check that cable adjustment is correct (see "Trendelenburg/Reverse Trendelenburg cable adjustment" in chapter 4).

   The adjustment is correct.

   Yes **No**

   ⇩ ⇨ Adjust the Head Section release cable while referring to the corresponding procedure in chapter 4, then go to the "Function checks" at the beginning of this chapter.

6. Push the Trendelenburg/Reverse Trendelenburg handle and put the bed frame in Reverse Trendelenburg.

   The bed frame slides in Reverse Trendelenburg up to an angle of 12° without difficulty and without reaching this position too quickly (Warning: Normal effort is enough to put the bed in Reverse Trendelenburg).

   Yes **No**

   ⇩ ⇨ Go to step 8

7. Push the Trendelenburg/Reverse Trendelenburg handle and put the bed frame in Trendelenburg.

   Note: The maximum angle of 12° is only reached in Trendelenburg between high and middle positions.

   The bed frame slides in Trendelenburg up to an angle of 12° without difficulty and without reaching this position too quickly (Warning: Normal effort is enough to put the bed in Trendelenburg).

   Yes **No**

   ⇩ ⇨ Go to step 8.

   Go to step 10.

8. Check for broken parts at the base of the Trendelenburg gas cylinders (this requires disassembly).

   The parts at the base of the gas cylinders are in good condition.

   Yes **No**

   ⇩ ⇨ Replace the damaged parts, then go to the "Function checks" at the beginning of this chapter.

9. Replace the gas cylinders. If this solves the problem, go to the "Function checks" at the beginning of this chapter, otherwise contact your national HILL ROM representative for service.

10. Press the "DOWN" knob of the "HiLow" function while the bed is in Trendelenburg until the bed frame reaches its lowest position.

    The bed frame stops upon contact of the Trendelenburg limit switch without particular stress on the frame.

    Yes **No**

    ⇩ ⇨ Go to step 11.

    The problem seems to be due to improper use of the bed. Consult the instruction manual to make sure it is being used properly. If the problem persists, contact your national HILL ROM representative for service.

11. Replace the HiLow motor (connected to output n 1 of the power unit).

    This solves the problem.

    Yes **No**

    ⇩ ⇨ Put the Hilow motor back in place and replace the power unit. If this solves the problem go to the "Function checks" at the beginning of this chapter, otherwise contact your national HILL ROM representative for service.

Go to the "Function checks" at the beginning of this chapter.

2.9 CPR function not operating correctly

1. Check that the lockout switch(es) is/are in "unlocked" position (lock open).

   The switch(es) is/are set to the correct position(s).

   Yes **No**

   ⇩ ⇨ Set the switch(es) to the correct position(s), then go to step 2.

2. Press the "UP" knob of Head Section function.

   The Head Section raises normally and stops in high position.

   Yes **No**

   ⇩ ⇨ Go to **RAP 2.3**.

3. Remove the hard surface of the bed frame. Check that the screws, latches or shafts are not damaged or missing on the release handles or on the motor mechanism (refer to the assembly diagram in chapter 5).

   No screw, latch or shaft is damaged or missing.

   Yes **No**

   ⇩ ⇨ Replace the missing or damaged parts, then go to the "Function checks" on page 2.3.

4. Check that the Head Section release cable is not broken.

   The cable is in good condition.

   Yes **No**

   ⇩ ⇨ Replace the release cable while referring to the corresponding procedure in chapter 4.

5. Check that the release cable is correctly adjusted.

   The adjustment is correct.

   Yes **No**

   ⇩ ⇨ Adjust the release cable(s) while referring to the corresponding procedure in chapter 4.

6. Replace the Head section motor.

   This solves the problem.

   Yes **No**

   ⇩ ⇨ Put the Hilow motor back in place and replace the power unit. If this solves the problem go to the "Function checks" at the beginning of this chapter, otherwise contact your national HILL ROM representative for service.

7. Go to the "Function checks" at the beginning of this chapter.

Notes :

2

3. Theory of Operation

Section Contents

General wiring and element structure - LI150Ax 3-2

3.1 General Operation 3-3

3.1.1 Sliding head section 3-3

3.1.2 Auto-contour mode (optional, according to configuration) 3-3

3.1.3 Head and Footboards 3-3

3.1.4 Linen holder (optional, according to configuration) 3-3

3.1.5 Siderails (accessories) 3-3

3.1.6 Casters 3-4

3.2 Sub-system Theory 3-4

3.2.1 Mechanical sub-system 3-4

3.2.2 Electrical sub-system 3-5

General wiring and component structure – LI150Ax

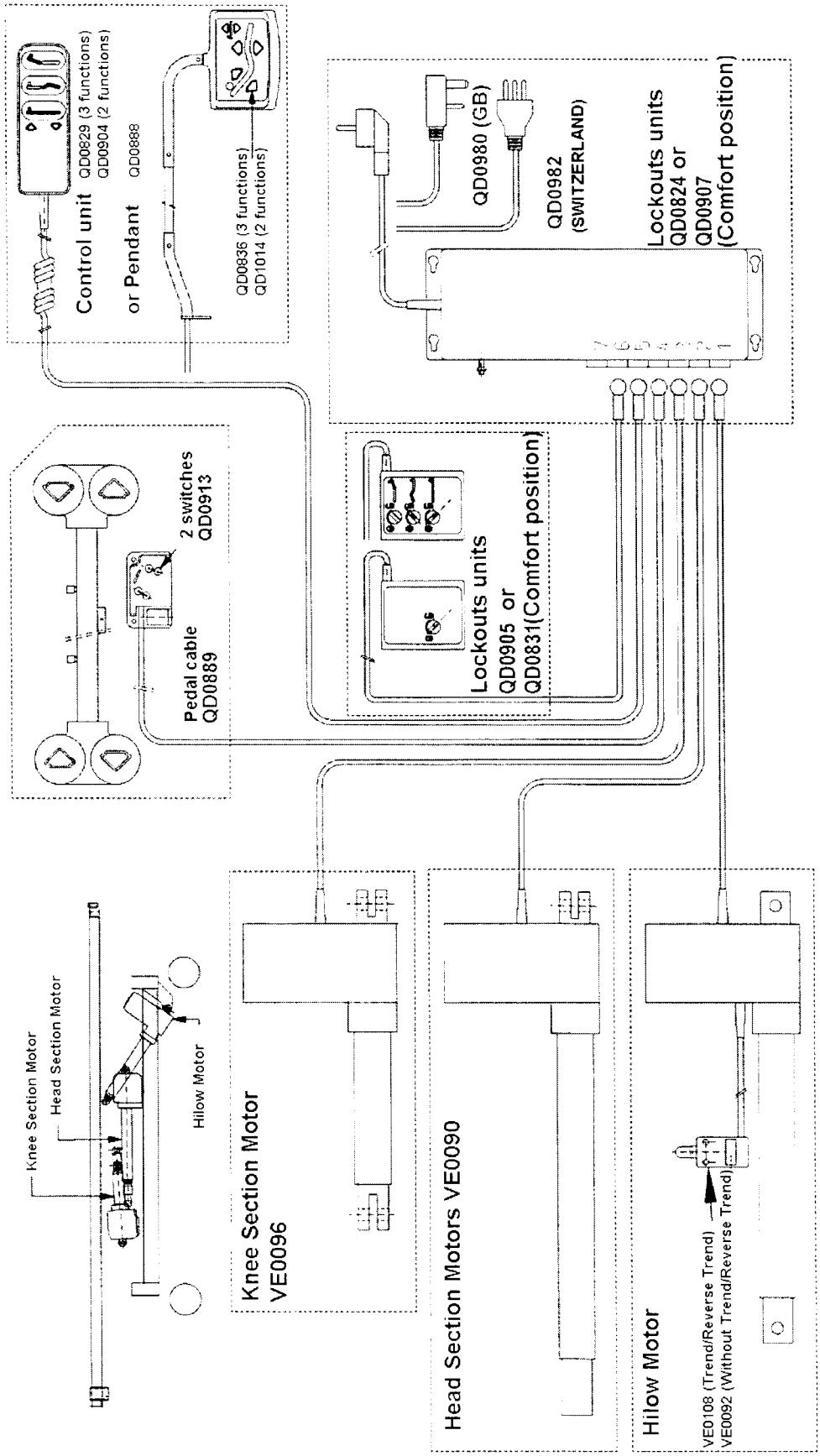

3.1 General Operation

The LI150Ax Hill Rom bed uses electricity from the main supply to operate the following functions:

- Hilow - raising/lowering of the bed
- Head Section - raising /lowering
- Knee Section - raising/lowering

These features are governed electrically by a power unit and can be accessed by both the patient and attendant by using the control unit or the flexible arm pendant (optional). The nursing staff may also raise or lower the sleep surface using the optional pedal.

3.1.1 Sliding Head Section

Sliding backwards the Head Section when using the raise controls increases seat surface. This position helps reduce pelvic pressure and shear force on the patient, also allowing him to breathe more easily.

3.1.2 Auto-contour mode (optional, according to configuration)

The LI150Ax bed has a special mode called 'auto-contour' (optional, according to configuration). It is used to automatically raise the Knee Section by 18° once the Head Section raise control has been issued. This function prevents the patient from sliding toward the foot end of the bed when the Head Section is raised. This function is controlled by the power unit and a microswitch built in the Foot Section Crank motor.

3.1.3 Head and Footboards

The head and footboards have a multi-piece structure. Three types of board are available:

- Médiform boards: blow molded plastic construction, stratified color panels and steel tubing inserts used for mounting. The boards also have built-in handles to control steering.
- Round tube boards and sliding head boards: Made of Ø 32mm chrome-plated tube through which a large (compact) stratified board is inserted, width = 8mm.

The LI150Ax beds are fitted with post type mounts for installing the head and footboards. The boards are inserted onto round vertical bases at each corner of the bed. Each board is fixed by two lock handles located under each base. They are easily removed by pushing the lock handles down and lifting the panels up.

3.1.4 Bed extension (optional)

The bed has an optional extension for tall persons. A further 18 cm may be added to the length of the bed by sliding the foot panel toward the stops. The removable frame can be positioned in different ways when retracted. Bed extension mattress pads are also available.

3.1.5 Linen holder (optional, according to configuration)

The linen holder is fixed on the foot end of the bed under the bed frame or the movable frame of the bed frame extension. It slides out from under the bed frame. When it is pulled out, the linen holder can support a maximum of 1.5 kg.

3.1.6 Siderails (accessories)

All siderails are of a welded construction made up of metal tubes, pivot arms and mounting vices. They form a solid structure which can be fixed to the side panels of the bed with a securing lever on each vice.

3.1.6 Casters

The four casters of the bed are equipped with a braking function. The right head end caster or the left foot end caster (optional, according to configuration), also provides steering.

The bed is equipped with a central braking system which can be foot-controlled using a pedal located on the right and left of the foot end of the bed. The brakes are set by pressing the beige pad on the pedal, which engages the braking system on the four casters. The steering function is operated by pressing the green pad on the pedal. This locks the right head end or the left foot end caster into place lengthwise. The bed can then be steered by simply pushing it from the foot end.

3.2 Sub-system Theory

The operation of the 150A bed can be divided into two categories or sub-systems:

- Mechanical
- Electrical

The combination of the functions of these two sub-systems is used to operate the bed. The interaction of these two sub-systems allows all operational functions to work.

Each of these sub-systems will be described individually in the following chapters. The schematics of the electrical and mechanical sub-systems will be provided with a functional description.

3

3.2.1 Mechanical sub-system

The mechanical sub-system includes two linked systems:

- The base
- The bed frame

All primary functions are operated by low voltage motors.

Trendelenburg/Reverse Trendelenburg (optional, according to configuration)

The Trendelenburg / Reverse Trendelenburg position is a mechanical function controlled by two gas cylinders. First of all, the bed frame must be lifted into high position or at least to middle position. Next, continue with the following procedure.

When the control lever of this function is handled, the two gas cylinders are released, allowing the bed frame to move into Trendelenburg or Reverse Trendelenburg while assisting the movement.

The lowering of the bed frame in Trendelenburg is stopped by the external Limit Switch (LS) of the Hilow motor located on the base of the foot section. In Reverse Trendelenburg, it is the internal Limit Switch of the motor which intervenes..

Emergency Levelling: CPR

The CPR control is located on the corners of each side of the Head Section on the side panels of the bed frame. When activated, it releases the drive mechanism which allows gravitational lowering of the head section, assisted/damped by a gas cylinder.

CPR Control

Hold one side of the Head Section and lift one of the levers located on each side of the bed frame.

Keep the lever in operation to control the lowering of the Head Section.

CPR Unlock

Once the control lever is released, the Head Section will function normally when the "Raise Head Section" function is selected.

3.2.2 Electrical sub-system

Refer to the cabling diagrams at the beginning of this chapter for specific information regarding cabling.

The bed is equipped with Dewert motors for the Head Section, Knee Section and Hilow functions which are controlled by a Dewert power unit. The unit operates with a 230VAC-50hz main supply.

3.2.2.1 Theory of Operation

The 150Ax bed is operated by two models of power unit of which the references are: QD0824 and QD0907. These two units control the electrical functions of the bed:

- Hilow,
- Head Section,
- Knee Section (option according to configuration)

The QD0907 unit allows for the automatic contour mode (optional, according to configuration).

Low voltage supply

Each unit is equipped with a power supply unit made up of a 230V/24V AC transformer, whose input is protected by two 1.6A time-delay fuses, and the output by a 10A time-delay fuse.

The 24V AC supply is complemented by a rectifier protected by a heat controller (stuck to the rectifier, it opens the relay control circuit in case the rectifier overheats) and a filter capacitor. A 1A time-delay fuse on the output of the rectifier protects the entire relay control circuit.

The 24V DC supply produced in this way is not regulated.

The functions are activated by the pendant or the satellite control panel, or by the Hilow pedal, after having electrically released each of them. The control and lockout signal is in 24V DC.

Movement lockout

There are two lockout units available:

- general lockout by a single standard switch.
- lockout - by function - provided by three switches: a diode is in series with each of them, the cathode is connected to the lockout unit common lead.

These lockout boxes are located on the left or on the right of the bed frame along the sides panels.

Motors

Motors are continuously supplied in 24 V by an integral power supply cable and a connector.

They have internal limit switches:

- Hilow motor: it has 3 internal limit switches. One of them is not used. These limit switches stop the supply of the motor control relays.
- This motor also has an external limit switch necessary to lower the bed frame in Trendelenburg. In this case the bed frame reaches the base before the internal low limit switch is activated. There is no such problem when the bed frame is in Reverse Trendelenburg position.
- Knee Section motor: it has 3 internal limit switches, one of them, the middle one, permits auto-contour control. These limit switches stop the supply of the motor control relays.
- Head Section motor: two internal limit switches stop the direct supply of the motor. A diode in parallel with each of them, and mounted in opposite position, allows the engine to perform reverse operation when one of the limit switches is open.

In all motors, the high and low, internal and external limit switches are NC contacts (Normally Closed) while the middle limit switches of the Hilow and Knee Section motors are NO contacts (Normally open).

Hilow priority

The Hilow function has priority over the Head Section and Knee Section functions. A specific relay stops the supply of the two corresponding motors when raising or lowering the bed.

Auto-contour

The QD0907 power unit does not operate with Auto-contour: when the Head Section raises the Knee Section also raises automatically up to an angle of 18°, then the Head Section continues to raise up to its high position. This prevents the patient from sliding toward the foot end of the bed. In the same way, when the Head Section lowers, both sections level. This function can be locked by the Knee Section lockout switch.

To operate this auto-contour control, the QD0907 box holds a twin-coil bistable relay controlled by the middle limit switch of the Head Section motor.

> **Note**: *In order to lock the auto-contour mode,* it is necessary to lock the Knee Section function. If the latter will be used later, the function must be released.
>
> **Note**: The warranty will become void if any electrical device has been opened.

Notes:

3

4. Removal, Replacement, and Adjustment Procedures

Section Contents

4.1 Pendant 4-2
Disassembly 4-2
Reassembly 4-2
4.2 Power unit 4-3
Disassembly 4-3
Reassembly 4-3
4.3 Fexible arm pendant 4-4
Disassembly 4-4
Reassembly 4-4
4.4 Lockout unit 4-5
Disassembly 4-5
Reassembly 4-5
4.5 Hilow motor 4-6
Disassembly 4-6
Reassembly 4-6
4.6 Head Section motor 4-7
Disassembly 4-7
Reassembly 4-8
4.7 Knee Section motor 4-8
Disassembly 4-8
Reassembly 4-9
4.8 Trendelenburg/Reverse Trendelenburg .. 4-9
4.8.1 Trendelenburg/Reverse Trendelenburg control cable 4-9
Disassembly 4-9
Reassembly 4-10
Adjustment 4-10
4.8.2 Trendelenburg/Reverse Trendelenburg gas cylinders 4-11
Disassembly 4-11
Reassembly 4-11
4.9 Head Section release cable 4-12
Disassembly 4-12
Reassembly 4-12
Adjustment. 4-12
4.10 Head Section shock absorbing gas cylinder 4-13
Disassembly 4-13
Reassembly 4-13
4.11 Head and Footboards 4-13
Disassembly 4-13
Reassembly 4-13
4.12 Single Foot Section Rack 4-14
Disassembly 4-14
Reassembly 4-14
4.13 Bed extension 4-14
Disassembly 4-14
Reassembly 4-15
4.14 Bed frame linen holder 4-15
Disassembly 4-15
Reassembly 4-16
4.15 Linen holder on bed extension 4-16
Disassembly 4-16
Reassembly 4-16

4.1 Pendant

Tools required: 1 small standard screwdriver
1 wire cutter

Disassembly

1. Put the bed in its highest position if possible and remove the siderails if the bed is equipped with any.
2. Remove the hard surface from the bed frame.
3. Disconnect the bed from its power unit.

WARNING

Current is present on the connections when the bed is switched on. Technical personnel may be harmed if the bed is not unplugged from its power source.

4. Release the power unit cover by unclipping the four clips which hold it on and store them in a safe place.
5. Remove the power unit socket lockout cover. To do this, use the small screwdriver to unclip the two latches that hold the cover (without removing them), and remove the cover.
6. Disconnect plug N° 5 from the power unit and remove the pendant from the bed (the input and output numbers of the power unit are indicated on the lockout cover and on the power unit itself).
7. Remove the pendant cable from the cable sleeve.
8. Using the small screwdriver, open the bed frame chute which holds the pendant cable and remove the latter.
9. Using the wire cutter, cut the plastic clamps which secures the pendant cable to the lockout unit support (notice there is a groove for holding the clamp in place). The pendant may now be removed.

Reassembly

1. Connect the pendant socket to input N° 5 of the power unit.
2. Install the plug lockout cover on the power unit.
3. Clip the two plug lockout cover latches so as to secure the cover.
4. Install the power unit cover and secure with the four clips provided.
5. Thread the pendant cable through the cable sleeve.
6. Insert the pendant cable through the bed frame chute and close the latter.
7. Use a new plastic clamp to secure the cable to the lockout unit support.
8. Perform the "Function checks" described on page 2.3.

4.2 Power unit

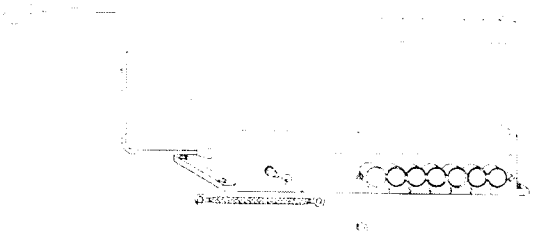

Tools required:
- 1 small standard screwdriver
- 1 Phillips medium head screwdriver
- 1 3 mm Allen wrench
- 1 7 mm open end wrench
- 1 8 mm open end wrench

Disassembly

1. Put the bed in its highest position if possible and lower the side rails if the bed is equipped with any.
2. Remove the hard surfacefrom the bed frame.
3. Disconnect the bed from its power unit.

WARNING

Current is present on the connections when the bed is switched on. Technical personnel may be harmed if the bed is not unplugged from its power source.

4. Remove the power unit cover by unclipping the four clips holding it on and store them in a safe place.
5. Use the Phillips medium head screwdriver to unscrew and remove the anti-snatch system from the power cable, located under the bed frame.
6. Remove the plug lockout cover from the power unit. To do this, unclip the two latches that hold the cover using the small screwdriver, (without removing them) and remove the cover.
7. Disconnect all the plugs from the power unit.

   Note: The input and output numbers of the power unit are indicated on the lockout cover and on the power unit itself. Each plug also has its connection number engraved on it.
8. Use the 7 mm open end wrench to loosen the screw that secures the ground strap and remove it in order to release the strap.
9. Use the 3 mm Allen wrench and the 8 mm open end wrench to loosen and remove the two screws that secure the power unit to the bed lift arm. Store the plastic spacers that secure the unit in a safe place and then remove the power unit from the bed.

Reassembly

1. Appropriately position the power unit on the lift arm.
2. Position the two screws that hold the unit as well as the plastic spacers.
3. Use the 3 mm Allen wrench and the 8 mm open end wrench to tighten the unit screws.
4. Use the Phillips medium head screwdriver to secure the power cable anti-snatch system, leaving 46 cm of cable length between the power unit and the anti-snatch system.
5. Install the ground braid on this screw provided on the power supply unit and tighten the corresponding nut using the 7mm open end wrench.
6. Connect all plugs to the power unit, following the numbers engraved on the plugs and the numbers shown on the power unit.
7. Place the plug lockout cover on the power unit.
8. Press the two socket lockout cover latches so as to secure the cover.
9. Install the power supply unit cover and secure with the four clips provided.
10. Perform the "Function checks" described on page 2.3.

4.3 Flexible arm pendant

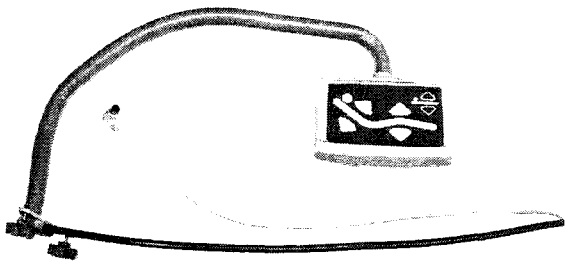

Tools required: 1 small standard screwdriver
1 Phillips medium head screwdriver

Disassembly

1. Put the bed in its highest position if possible and lower the side rails if the bed is equipped with any.
2. Put the Head Section in high position if possible.
3. Remove the hard surface from the bed frame.
4. Disconnect the bed from its power unit.

WARNING

Current is present on the connections when the bed is switched on. Technical personnel may be harmed if the bed is not unplugged from its power source.

5. Remove the power unit cover by unclipping the four clips which hold it on and store them in a safe place.
6. Remove the plug lockout cover from the power unit. To do this, unclip the two latches that secure the cover using the small screwdriver, (without removing them), and remove the cover.
7. Disconnect plug N° 5 from the power unit.

   Note: The input/ouput numbers of the power unit are indicated on the lockout cover and on the power unit itself. Each plug also has its connection number engraved on it.
8. Use the small standard screwdriver to open the bed frame raising arm chute that secures the pendant cable, and release the latter.
9. Use the Phillips medium head screwdriver to unscrew the four screws holding the two guides of the flexible arm pendant cable sleeve under the Head Section. Store the screws and the guides in a safe place.
10. Unscrew the two adjusting knobs that secure the flexible arm pendant on the Head Section.

Reassembly

Carry out the disassembly operation procedures in reverse order, then perform the "Function checks" described on page 2.3.

4.4 Lockout unit

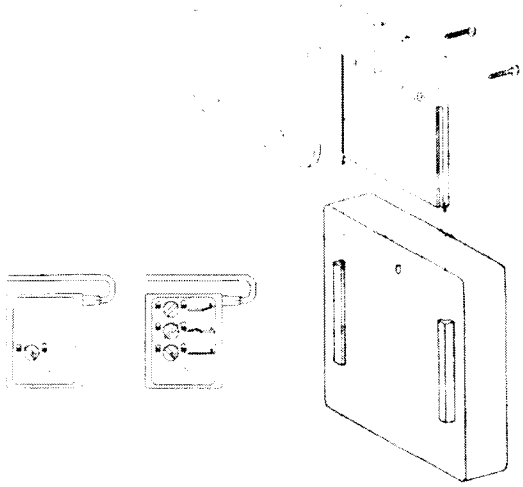

Tools required: 1 small standard screwdriver
1 wire cutter

Disassembly

1. Put the bed in its highest position if possible and lower the side rails if the bed is equipped with any.
2. Remove the hard surfacefrom the bed frame.
3. Disconnect the bed from its power unit.

WARNING

Current is present on the connections when the bed is switched on. Technical personnel may be harmed if the bed is not unplugged from its power source.

4. Remove the power unit cover by unclipping the four clips which hold it on and store them in a safe place.
5. Remove the plug lockout cover from the power unit. To do this, unclip the two latches that secure the cover using the small screwdriver (without removing them), and remove the cover.
6. Disconnect plug N° 6 from the power unit.

   Note: The input/ouput numbers of the power unit are indicated on the lockout cover and on the power unit itself. Each plug also has its connection number engraved on it.
7. Use the small standard screwdriver to open the bed frame chute that connects the power unit to the lockout unit, and release the lockout unit cable.
8. Using the wire cutter, cut the clamp that secures the lockout unit cable to its support.
9. Using the small standard screwdriver, push the central locking flap, located on the side of the bed between the bed frame and the lockout unit, pulling the lockout unit down at the same time.

Reassembly

Carry out the disassembly operation procedures in reverse order and replace the used plastic clamp, then perform the "Function checks" described on page 2.3.

4.5 Hilow motor

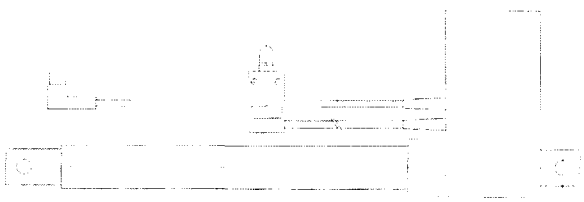

Bed with Trendelenburg/Reverse Trendelenburg

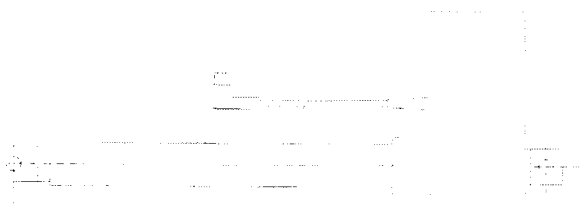

Bed without Trendelenburg/Reverse Trendelenburg

Tools required: 1 small standard screwdriver
1 3 mm Allen wrench
1 7 mm open end wrench

4

Disassembly

1. Put the bed in its highest position if possible and remove the side rails if the bed is equipped with any.

   Note: The procedure is identical if the bed is locked in low position.
2. Make sure that the bed frame is in horizontal position and then remove the hard surface from the bed frame.
3. Disconnect the bed from its power unit.

WARNING

Current is present on the connections when the bed is switched on. Technical personnel may be harmed if the bed is not unplugged from its power source.

4. Place the bed in such a position that the casters are pointing to the right (as seen from a person laying on the bed).
5. Remove the power unit cover by unclipping the four clips which hold it on and store them in a safe place.
6. Remove the plug lockout cover from the power unit. To do this, unclip the two latches that hold the cover using the small screwdriver, (without removing them), and remove the cover.
7. Disconnect plug N 1 from the power unit.

   Note: The input/output numbers of the power unit are indicated on the lockout cover and on the power unit itself. Each plug also has its connection number engraved on it.
8. Use the small standard screwdriver to open the bed lift arm chute which connects the power unit to the Hilow motor, and release the motor cable.
9. Slide the bed onto its right hand side.

WARNING

Two persons are required to carry out this procedure. Failure to do so may result in physical injury.

10. Remove one of the Truarc rings from the shaft located at the base of the Hilow motor and remove the corresponding shaft.
11. Pull the motor slightly aside in order to gain access to its external limit switch.
12. Bed with Trendelenburg/Reverse Trendelenburg function: use the 3 mm Allen wrench and the 7 mm open end wrench to unscrew and remove the two screws which hold the limit switch in order to release it.
13. Remove one of the rings from the cylinder end of the shaft and remove the corresponding shaft. The motor may now be removed.

Reassembly

1. With the bed still on its side, put it down on its two bumpers and move the frame bracket closer to the bed frame without scraping the casters on the ground (this is not necessary if the bed was locked in low position).
2. Position the Hilow motor and install the end shaft.
3. Attach the missing Truarc ring to the motor end shaft.
4. Bed with Trendelenburg/Reverse Trendelenburg function: install the external limit switch of the motor and tighten its two screws using the 3 mm Allen wrench and the 7 mm open end wrench.
5. Adjust the position of the motor base according to its supports (by moving the frame bracket and the bed frame further apart or closer together) and install the shaft which holds it on.
6. Attach the missing Truarc ring to the motor base shaft.
7. Insert the motor cable through the lift arm chute (a slot is provided at the base of the chute to guide the cable), then close the chute.

CAUTION

Leave play for the cable between the motor and the chute opening in order to avoid damaging the cable when the motor is in use.

8. Put the bed back down onto its casters.
9. Carry out steps 7 to 1 of the disassembly procedure in reverse order, then perform the "Function checks" described on page 2.3.

4.6 Head Section motor

Tools required: 1 small standard screwdriver
1 5 mm Allen wrench
1 13 mm open end wrench

Disassembly

1. Put the bed in high position.
2. Remove the hard surface from the bed frame.
3. Put the Head Section in low position if possible, using the electrical control or by pressing down the emergency CPR handle.
4. Disconnect the bed from its power unit.

WARNING

Current is present on the connections when the bed is switched on. Technical personnel may be harmed if the bed is not unplugged from its power source.

5. Remove the power unit cover by unclipping the four clips which hold it on and store them in a safe place.
6. Remove the plug lockout cover from the power unit. To do this, unclip the two latches that hold the cover, using the small screwdriver, (without removing them), and remove the cover.
7. Disconnect plug N°2 from the power unit.

   Note: The input/output numbers of the power unit are indicated on the lockout cover and on the power unit itself. Each plug also has its connection number engraved on it.
8. Release the Head Section motor cable from the cable sleeve which connects to the bed frame.
9. Use the small standard screwdriver to open the bed frame chute located next to the Head Section motor, and release the motor cable.

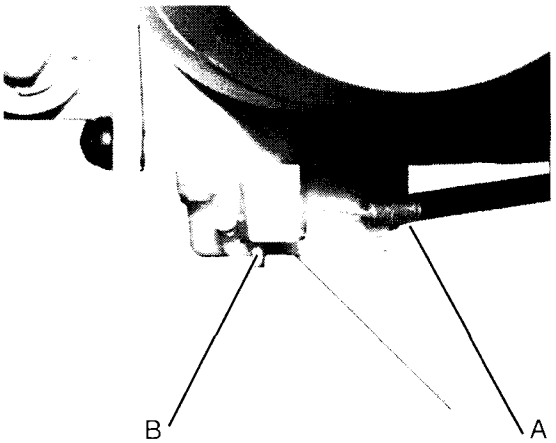

10. Manually operate the release of the Head Section motor on the motor body in order to release the retainer (A) of the release cable (see figure 1).
11. Insert the small standard screwdriver in the release control cam, push the cable locking clip (B) in order to release the cable (see figure 1). Use the 5 mm Allen wrench to unscrew the two screws (C) which hold the motor end shaft. You may wish to use the 13 mm open end wrench to stop the shaft from rotating (see figure 2).

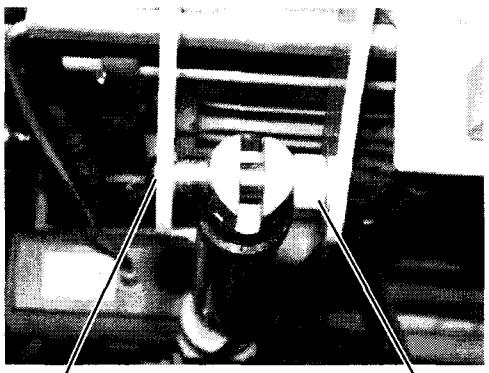

Figure 2

WARNING

Hold the Head Section while removing the shaft if the Head Section is not level to begin with. Failure to do so may result in physical injury.

12. Store the motor end shaft and the plastic spacer (D) in a safe place.
13. Remove one of the rings of the shaft located at the base of the Head Section motor and remove the corresponding shaft while holding the motor in place.

Reassembly

Carry out the disassembly operation procedures in reverse order.

4.7 Knee Section motor

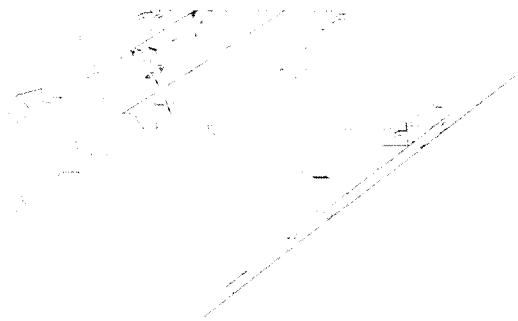

Tools required: 1 small standard screwdriver
1 wire cutter

Disassembly

1. Put the bed in high position and, if possible, level the Head Section and the Knee Section.
2. Remove the hard surface from the bed frame.
3. Disconnect the bed from its power unit.

WARNING

Current is present on the connections when the bed is switched on. Technical personnel may be harmed if the bed is not unplugged from its power source.

4. Remove the power unit cover by unclipping the four clips which hold in on and store them in a safe place.
5. Remove the plug lockout cover on the power unit. To do this, unclip the two latches that hold the cover using the small screwdriver, (without removing them), and remove the cover.
6. Disconnect plug N°3 from the power unit.

   Note: The input/output numbers of the power unit are indicated on the lockout cover and on the power unit itself. Each plug also has its connection number engraved on it.
7. Release the Knee Section motor cable from the cable sleeve which leads to the bed frame.
8. Use the small standard screwdriver to open the bed frame chute located next to the Knee Section, and release the motor cable.
9. Use the wire cutter to cut the plastic clamp which holds the electric cable to the motor body.

10. Remove one of the Truarc rings from the motor end shaft and remove the shaft.

WARNING

Hold the Knee Section in place while removing the shaft if the Head Section is not level to begin with. Failure to do so may result in physical injury.

11. Remove one of the shaft rings located at the base of the Knee Section motor and remove the corresponding shaft while holding the motor in place.

Reassembly

Carry out the disassembly operation procedures in reverse order and replace the used plastic clamp, then perform the "Function checks" on page 2.3.

4.8 Trendelenburg/Reverse Trendelenburg

4.8.1 Trendelenburg/Reverse Trendelenburg control cable

Note: The Trendelenburg/Reverse Trendelenburg control is operated by a single cable connected to the two gas cylinders which enable the function.

Tools required: 2 8 mm open end wrenches
1 wire cutter
1 mallet
1 O 6 mm pin punch

Disassembly

1. Put the bed in high position if possible, then set the brakes and remove the siderails if any.
2. Remove the hard surface from the bed frame.
3. Disconnect the bed from its power unit.

WARNING

Current is present on the connections when the bed is switched on. Technical personnel may be harmed if the bed is not unplugged from its power source.

4. Release the two Trendelenburg/Reverse Trendelenburg cable sleeves from the guide under the bed frame, on the left foot side of the bed (as seen by the patient laying in bed).
5. Use the wire cutter to cut the plastic clamp which holds the two cable sleeves.

   Note: There is always a clamp on the two upper shafts (A) (see figure 2).

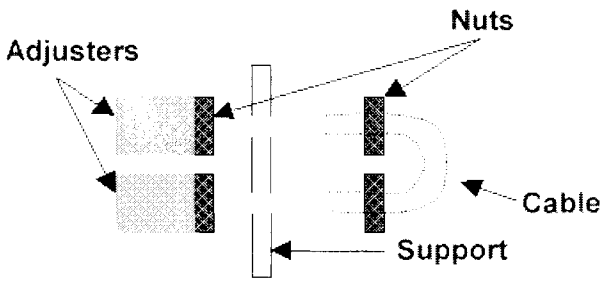

Figure 1

6. Use the 8 mm open end wrench to unscrew the nuts of the cable adjusters on the Trendelenburg/ Reverse Trendelenburg handle so that what you get matches figure 1, then release the cable from

its housing (F) (see figure 4).

7. While holding the foot end of the bed frame, remove the Truarc rings from the upper shafts (A) of the pivoting section (B) then remove the two corresponding shafts (see figure 2) using the mallet and the pin punch.

WARNING

Two persons are required to carry out this procedure. Failure to do so may result in physical injury.

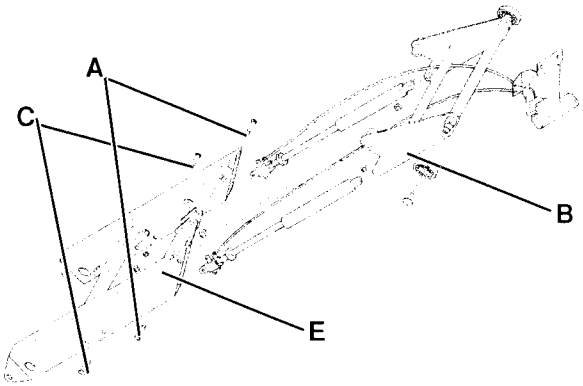

Figure 2

8. While continuing to hold the foot end of the bed frame, remove the Truarc rings from the lower shafts (C) of the pivoting section (B) then remove the two corresponding shafts (see figure 2) using the mallet and the pin punch.

   Note: There are two close drillings on the crossbar (E) for the shafts (C) (see figure 2). These shafts are always placed in the upper drilling.

9. Slide the pivoting arm (B) to its guiding rails, toward the foot end of the bed, while raising the latter in order to extract all cylinders from the elevation arm.

10. Slide the pivoting arm (B) toward the center of the bed frame in order to bring the rollers along to the opening (D) of the guiding rails, while moving the bed into Trendelenburg (see figure 3).

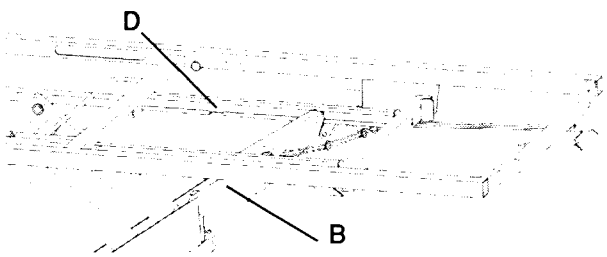

Figure 3

11. Remove the pivoting section (B) along with the gas cylinders and the Trendelenburg/Reverse Trendelenburg double cable, from the crossbar (E). Place the pivoting section on the floor close to the bed (see figure 1).

    Note: Cables run under the elevation arm (B) and shafts (A) (see figure 2).

12. Place the foot end of the bed frame on the base or on a support block.

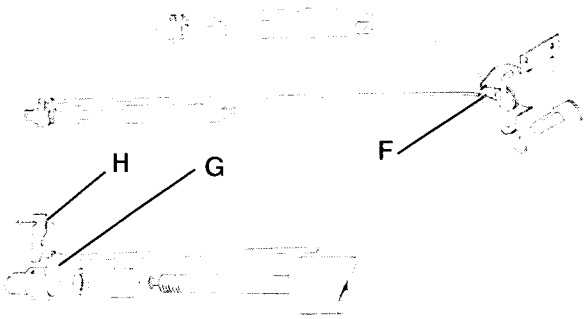

Figure 4

13. Remove the release head (G) cable and its lever (H) from every gas cylinder (see figure 4).

Reassembly

1. Carry out step 12 of the disassembly procedure in reverse order.

   Note: Only the Trend/Reverse Trend cable listed in chapter 5 may be installed on the LI150Ax bed.

2. Carry out the **Adjustment** procedure of the cable.
3. Carry out steps 11 to 2 of the Disassembly procedure and replace the used plastic clamps.
4. Perform the "Function checks" described on page 2.3.

Adjustment

1. Place the cable adjusters into their accommodation slots on the Trendelenburg/Reverse Trendelenburg handle support, and attach the cable to the handle (see figure 4).
2. Using the 8 mm open end wrenches, tighten the nuts of each adjuster so as to center the threaded ends of them on their support (see figure 5).

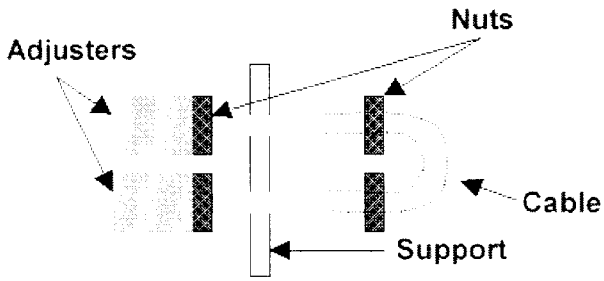

3. Push the handle to check that the two cylinders function correctly. Slightly adjust the adjusters in case the cable tension or the handle play are excessive.

   Note: The Trendelenburg/Reverse Trendelenburg handle should have some play.

4.8.2 Trendelenburg/Reverse Trendelenburg gas cylinders

Note: It is recommended that both gas cylinders are replaced at the same time to avoid uneven strain distribution when operating the Trendelenburg/Reverse Trendelenburg function.

Tools required:
- 2 8 mm open end wrench
- 1 17 mm open end wrench
- 1 wire cutter
- 1 set of adjustable pliers
- 1 mallet
- 1 Ø 6 mm pin punch

Disassembly

1. Follow the Trendelenburg/Reverse Trendelenburg control cable disassembly procedure step by step (procedure 4.8.1)
2. Remove the two Truarc rings which hold the cylinders and release the cylinders (see figure 1).

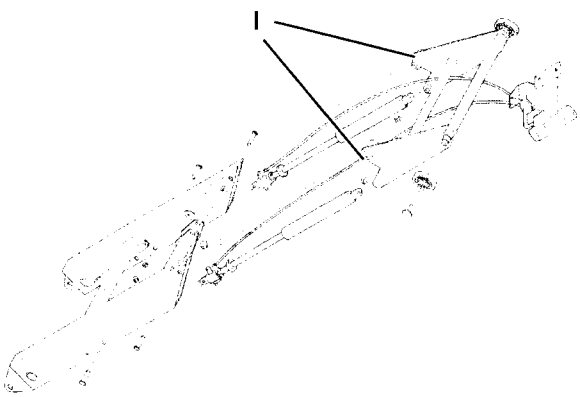

Figure 1

3. Use the 17 mm open end wrench to unscrew the lock-nut (J) holding the release head (G) (see figure 2), while gripping the release head with adjustable pliers.

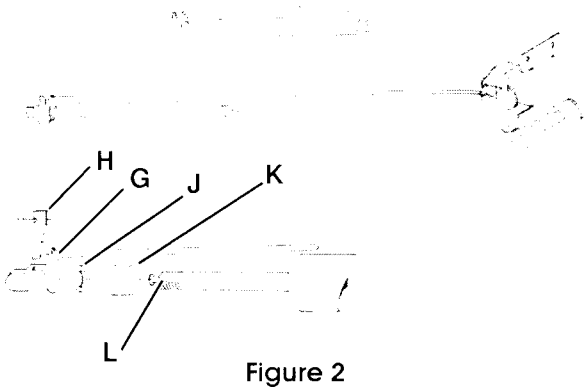

Figure 2

4. Unscrew and remove the release head (G) and its lever (H) (see figure 2).
5. Remove the lock-nut (J) and store the spacer (K) in a safe place (see figure 2).

Reassembly

1. Press the gas cylinder valve (L) (see figure 2) on the floor so that the rod comes out completely (to be done on both cylinders during reassembly).
2. Mount the spacer (K), the lock-nut (J) and then the release head (G) without tightening it (see figure 2).
3. Position the release lever in the release head (G) then tighten it slightly (without straining the valve) until there is contact with the cylinder valve (L).
4. Now that there is contact with the valve, screw the release head a half turn.
5. Using a 17 mm open end wrench, screw the lock-nut, (J) (see figure 2) while gripping the release head with the adjustable pliers.
6. Check the alignment of the head hole of the release lever (G) (see figure2) and the valve yoke. Adjust if necessary by rotating the cylinder.
7. Position the cylinders on the studs (I) (see figure 1), then install the corresponding Truarc rings.
8. Carry out the reassembly procedure of the Trendelenburg / Reverse Trendelenburg control cable. (4.8.1)

Figure 5

4.9 Head Section release cable

Tools required: 1 small standard screwdriver
1 4 mm Allen wrench
1 10 mm open end wrench
1 wire cutter

Disassembly

1. Put the bed in high position if possible and lower the siderails if any.
2. Remove the hard surface from the bed frame (not absolutely necessary).
3. Lower the Head Section using the electrical control or the emergency CPR handle or the control cam of the Head Section motor.
4. Disconnect the bed from its power unit.

WARNING

Current is present on the connections when the bed is switched on. Technical personnel may be harmed if the bed is not unplugged from its power source.

5. Use the 4 mm Allen wrench to loosen the screw which holds the Head Section release cable on the control handle and release the cable, or use the 10 mm open end wrench to unscrew the equipotential terminal (according to assembly) to release the cable.

   Note: The cable end is pointed toward the inside of the bed in order to avoid injury of personnel moving around the bed (except in the case of the two-ball end cable).
6. Release the cable sleeve from the stop on the release control handle.
7. Use the wire cutter to cut the plastic clamps which hold the cable sleeve under the bed frame. Pull on the release cable sleeve on the Head Section motor body in order to release the cable retainer (A) (see figure 1).

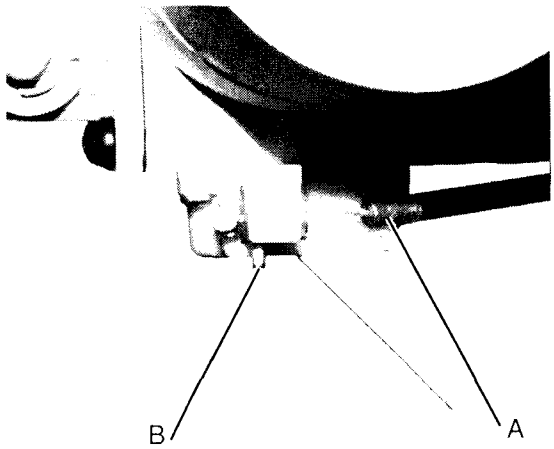

Figure 1

8. Insert the small standard screwdriver in the release control cam, push the cable clamp clip (B) in order to release the cable (see figure 1).

Reassembly

1. Repeat steps 9 to 6 of the Disassembly procedure in reverse order and replace the used plastic clamp.

   Note: Only the head section release cable listed in chapter 5 may be installed on LI150Ax beds.
2. Repeat steps 2 and 3 of the Head Section release cable **Adjustment** procedure

Adjustment.

1. Use the 4 mm Allen wrench to loosen the screw which holds the cable on the Head Section release handle and release the cable
2. Only if the cable is not equipped with two end balls: pull the cable hooking it around the locking screw on the release handle to avoid injury, then tighten the screw with the 4 mm Allen wrench leaving play of 2 or 3 mm in order to avoid unexpected release.
3. The cable must pass between the attachment screw washer and the handle body.
4. Tighten the screw which holds the cable with the 4 mm Allen wrench.

4.10 Head Section shock absorbing gas cylinder

Tools required: 1 standard screwdriver
1 10 mm box wrench
1 mallet

Disassembly

1. Put the bed in high position.
2. Put the head Section in low position
3. Remove the hard surface from the Head Section.
1. Unplug the bed from its power source.
2. Using a standard screwdriver, remove the Starlock attachment ring from the end of the cylinder.

   Note: Starlock rings can only be used once and so must be replaced with new ones after disassembly.
3. Using the standard screwdriver, remove the Starlock attachment ring from the base of the cylinder.
4. Remove the cylinder and its supports.

Reassembly

1. Place the cylinder onto its supports, the body being attached to the bed frame and the rod to the Head Section.
2. Position the new Starlock ring on the body of the cylinder and attach it using the 10 mm box wrench and the mallet (the Starlock ring should be placed in the center of the round part of the box wrench). Position another new Starlock ring on the cylinder rod in the same way as in step 2.
3. Perform the "Function checks" described on page 2.3.

4.11 Head and Footboards

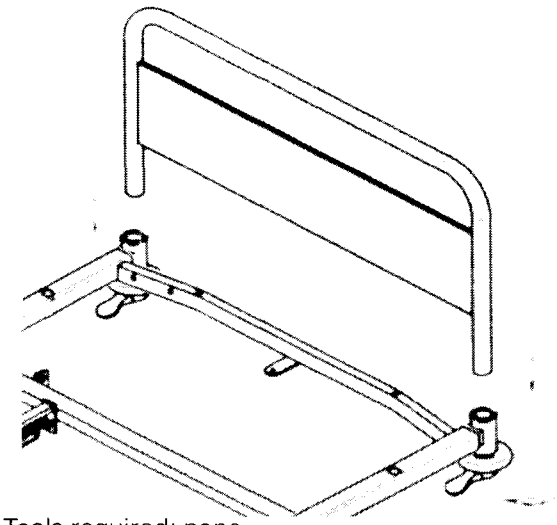

Tools required: none

Disassembly

1. Pull the two cams (handles) which attach the panels downwards so that they are vertical.
2. Remove the board.

Reassembly

1. Make sure the cams (handles) are in vertical position.
2. Insert the board into the support guides.
3. Move the attachment (cams) handles towards the inner part of the bed so as to put them in horizontal position.
4. Check that the board is locked properly by trying to lift it.

4.12 Single Foot Section Rack

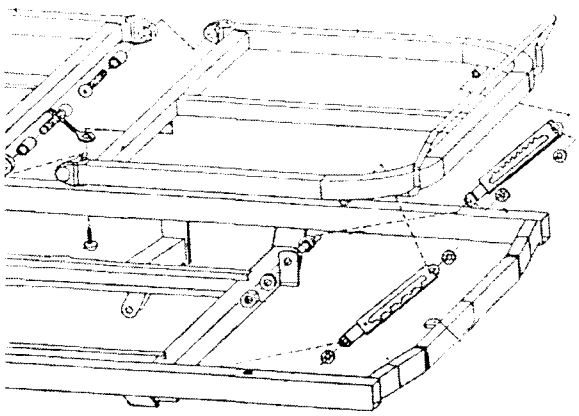

Outils nécessaires: 1 tournevis plat moyen
1 clé à oeil de 10 mm
1 maillet

Tools required: 1 standard screwdriver
1 10 mm box wrench
1 mallet

Disassembly

1. Put the bed in high position.
2. Put the Head Section in low position
3. Remove the hard surface from the Knee/Foot Section .
1. Unplug the bed from its power source.
2. Using the standard screwdriver, remove the two Starlock attachment rings from the rack to be disassembled.

   Note: Starlock rings can only be used once and so must be replaced after disassembly.
3. Remove the rack from its supports.

Reassembly

1. Put the rack onto its supports.
2. Position a new Starlock ring on the bed frame attachment of the rack and put it in place using the 10 mm bow wrench and the mallet (the Starlock ring should be placed in the center of the round part of the box wrench). Position a new Starlock ring on the other end of the rack in the same way as in step 2.
3. Position a new Starlock ring on the other rack end as described in step 2 above.
4. Perform the "Functions checks" described on page 2.3.

4.13 Bed extension

Note: This procedure allows for complete disassembly of the bed extension so as to replace any faulty parts.

Tools required: 1 Phillips Head screwdriver
1 5 mm Allen wrench
1 13 mm open end wrench

Disassembly

1. Put the bed in high position.
2. Put the Knee/Foot Section in low position
3. Remove the hard surface from the Knee/Foot Section .
4. Unplug the bed from its power source.
5. Remove the foot board of the bed by moving down the two cams (A) which attach the board so that they are in vertical position and lift the board up.
6. Using the open end wrench, unscrew and remove the screw that secures the ground strap to the bed extension.
7. Using the 5 mm Allen wrench, unscrew the two screws holding the Trendelenburg / Reverse Trendelenburg handle support. Remove the support from the bed extension.
8. Using the 13 mm open end wrench, loosen and remove the two screws (C) that secures the bed extension to the bed frame while holding the latter (se figure 1).

   Note: The retaining pegs of the ends of the bed extension rails which are inserted in the bed frame, are located towards the top of the bed frame.

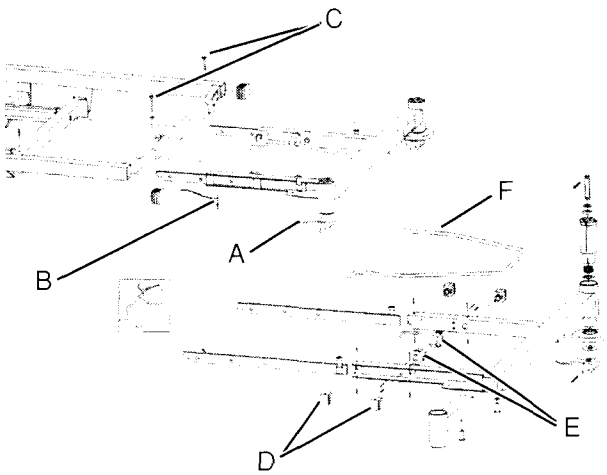

Figure 1

9. Separate the bed extension from the bed frame and put in on a work table.
10. Using a Phillips screwdriver, unscrew the screws holding the four bed extension rail guides (D) located on the right and on the left of the rail. (see figure 1).
11. Using a Phillips screwdriver, unscrew the screws holding the two guides (E) of the bed extension control handle (F). (See figure 1)

    Note: The guide openings (E) are oriented from the exterior to the interior of the bed extension in an upward position (see figure 1).

Reassembly

1. Carry out the Disassembly procedures in reverse order.
2. Using an ohmmeter, check the electrical link between a stripped piece of the bed extension and the earth terminal of the main supply of the bed. The displayed value should be less than 0,2 ohm.
3. Slightly lubricate the guiding rail of the bed extension using a standard lubricant.
4. Perform the "Functions checks" described on page 2.3.

4.14 Bed frame linen holder

Note: This procedure allows for complete disassembly of the linen holder system so as to replace any faulty parts.

Tools required: 1 Phillips screwdriver
1 5 mm Allen wrench

Disassembly

1. Put the bed in high position.
2. Put the Knee/Foot Section in low position
3. Remove the hard surface from the Knee/Foot Section .
4. Unplug the bed from its power source.
5. Using a 5mm Allen wrench, loosen the two screws (A) which attach the guides of the linen holder (see figure 1), and store the washers in a safe place. One is enough if you only wish to remove the linen holder tray.
6 Using the 5 mm Allen wrench, loosen the two screws (B) that secure the linen holder guides to the foot end of the bed while holding the linen holder (see figure 1), and store the washers in a safe place. One is enough if you only wish to remove the linen holder tray.

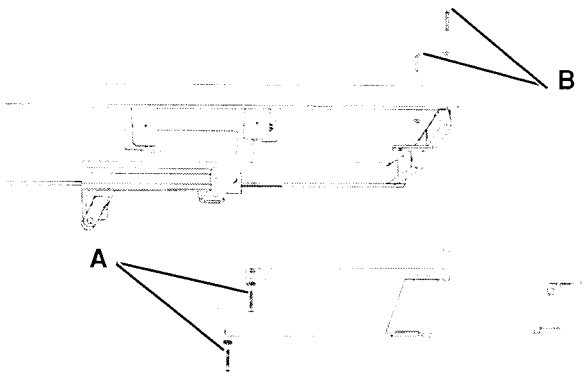

Figure 1

7. Place the linen holder or the disassembled guide on a work table.
8. Using the Phillips screwdriver, unscrew the screws attaching the two guides (C) holding the metal tray rod (D) (see figure 2).

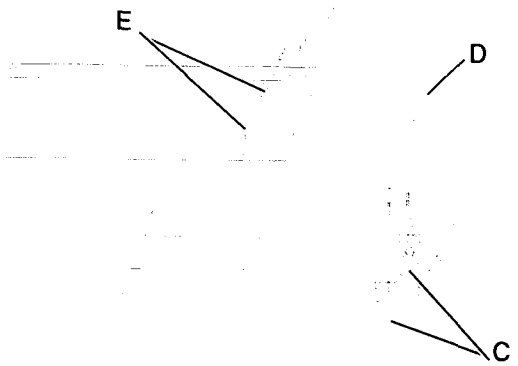

Figure 2

9. Using the Phillips screwdriver, unscrew the six screws holding the two guiding pads (E) of the linen holder tray.

Reassembly

Carry out the Disassembly procedures in reverse order.

4

4.15 Linen holder on bed extension

NOTE: This procedure allows for complete disassembly of the linen holder system so as to replace any faulty parts.

Tools required: 1 Phillips screwdriver
1 3 mm Allen wrench
1 8 mm open end wrench

Disassembly

1. Put the bed in high position.
2. Put the Knee/Foot Section in low position
3. Extract the bed extension out from its housing, then remove the hard surface of the Knee/Foot Section .
4. Unplug the bed from its power source.
5. Using the 3 mm Allen wrench and the 8 mm open end wrench, loosen the two screws (A) that secure the pads (B) of the linen holder to the left side of the bed frame (see figure 1), and remove the screws, bolts and pads while holding the tray. If necessary, remove the screws and pads from the opposite side of the bed.

   Note: The drillings of the pad screws on the side as indicated in figure 1 are oblong, allowing side adjustment of the linen holder tray.

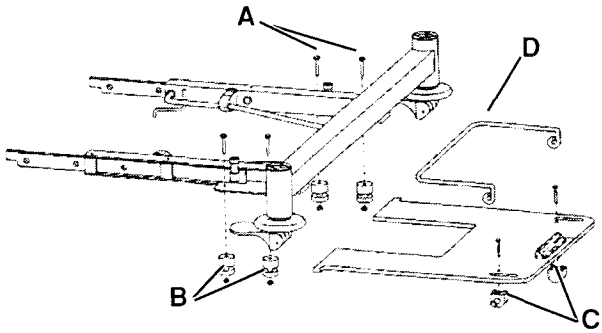

6. Put the linen holder tray assembly on a work table.
7. Using a Phillips screwdriver, unscrew the screws that secure the two guides (C) which hold the metal rod (D) of the tray. (see figure 1).

Reassembly

Carry out the Disassembly procedures in reverse order and adjust the play of the linen holder tray by the oblong screw drillings (A) (see figure 1).

5. Parts List

Section Contents

5.1 Replacement Part Ordering Procedure .. 5-2
5.2 Exchange policy 5-3
In-Warranty Exchanges 5-3
5.3 Recommended Spare Parts 5-3
5.4 LI150Ax 5-4
5.4.1 Base + elevation without shroud .. 5-4
5.4.2 Base + elevation with shroud 5-6
5.4.3 Base + Trendelenburg/Reverse Trendelenburg elevation, without shroud 5-8
5.4.4 Base + Trendelenburg/Reverse Trendelenburg elevation, with shroud 5- 10
5.4.5 Casters 5-12
5.4.6 Motor crossbar Trendelenburg/ Reverse Trendelenburg 5-14
5.4.7 Crossbar without Trendelenburg/ Reverse Trendelenburg 5-16
5.4.8 Brake pedal 5-18
5.4.9 Brake system 5-20
5.4.10 Frame 5-22
5.4.11 Frame on Trendelenburg/Reverse Trendelenburg elevation 5-24
5.4.12 Head section clutch 5-26
5.4.13 Trendelenburg/Reverse Trendelenburg handle 5-28
5.4.14 T/RT release on frame or extender 5-30
5.4.15 Head bumper support 5-32
5.4.16 Board quick assembly system 5-34
5.4.17 Extender on frame 5-36
5.4.18 Linen holder on frame 5-38
5.4.19 Linen holder on extender 5-40
5.4.20 Side protections 5-42
5.4.21 Accessory holding bar 5-44
5.4.22 Egress bar fittings 5-46
5.4.23 Sliding head section 5-48
5.4.24 Single foot section on SHS frame 5-50
5.4.25 Knee section on SHS frame 5-52
5.4.26 Hard surfaces on frame 5-54
5.4.27 Flexible arm pendant 5-56
5.4.28 Flexible arm on head section 5-58
5.4.29 Power supply 5-60
5.4.30 Power supply on elevation arm ... 5-62
5.4.31 Lockout unit 5-64
5.4.32 2-Side pedal 5-66
5.4.33 2-side pedal on frame 5-68
5.4.34 Knee section motor assembly 5-70
5.4.35 Ø: 32 round tube headboard 5-72
5.4.36 Ø: 32 round tube footboard 5-74
5.4.37 Mediform board 5-76
5.4.38 Sliding head section 5-78
5.4.39 Monitor holder 5-80

5.1 Replacement Part Ordering Procedure

Using the parts list in this manual, identify the part number(s) you require.

Call Hill Rom Technical Support (see page 2 of this manual). To avoid delay in ordering replacement parts, prepare your customer account number, purchase order number, product number and bed serial number before you call.

> **Note:** You will find the product and serial numbers on the model identification label which is located at the head end of the bed on the base or on the protection cover (option), see page 1-12.

Hill Rom also provides a fax number to promptly order parts, and request part prices and availability, or follow up on a service order: see page 2 of the manual.

We suggest you order for a minimum of 150FF to prevent extra charges for processing your order.

Terms:

- 48 hours if the parts are available.
- Shipping charges paid.
- Delivery charges are included in the part prices.
- Parts to be manufactured require a 3 week delay.

Please address all orders to your national Hill Rom representative (see page II of the manual).

To the attention of: Replacement parts service department.

5.2 Exchange policy

In-Warranty

Out-of-Warranty

In-Warranty Exchanges

HILL-ROM will systematically request return of faulty parts.

In some cases, the invoice sent with the parts will show the full selling price of the parts. This is for Hill Rom's internal use only and should not be confused with the price you will actually pay.

5.3 Recommended Spare Parts

List of the recommended spare parts for 10 Li150Ax beds for 3 years:

Description	Qty.
Handle pendant	1
Pendant keyboard on flexible arm	1
Lockout unit	1
Power unit	1
Hi-Low motor	1
Head Section motor	1
Knee Section motor	1

5.4 LI150Ax

5.4.1 Base + elevation without shroud

Item	Qty.	Reference	Description
1	1	Page 5-12	Casters
2	1	Page 5-16	Crossbar without Trendelenburg / Reverse Trendelenburg
3	4	S10649	Elevation ring
4	4	S10663	Elevation pivot shaft
5	1	QD0821	CE label
6	1	Page 1-12	Identification label
7	1	Page 5-62	Elevation arm + power unit
8	1	Page 5-18	F.U. pedals
9	1	S30198	Guiding ring hexa. tunnel
10	4	VI0290	VAT n°8*32 TR ZB
11	2	S30356	FU guide
12	2	VI0244	Washer L Ø 6*18 ZB
13	1	F10935	Hex rod F.U.
14	1	F10941	Hex rod F.U. single foot
15	1	LT0436	Binding FU
16	1	VE0092	Motor HL
17	4	QD0527	Truarc ring 12 springfix
18	2	S10658	Motor holding shaft
19	2	VI0419	Screw BHC M6*16 ZB
20	8	VI0418	VAT n° 10*13 CBL ZB
21	2	QD0630	Ground strap 11.5 A4565801
22	1	Page 1-13	Label 30mA French-German
24	1	Page 1-13	Label S+
25	1	Page 1-13	Label 30mA English
26	2	LT0865	Rod F.U.
27	2	VI0486	Screw HC M8 x 8 CUV. CRANT. ZB

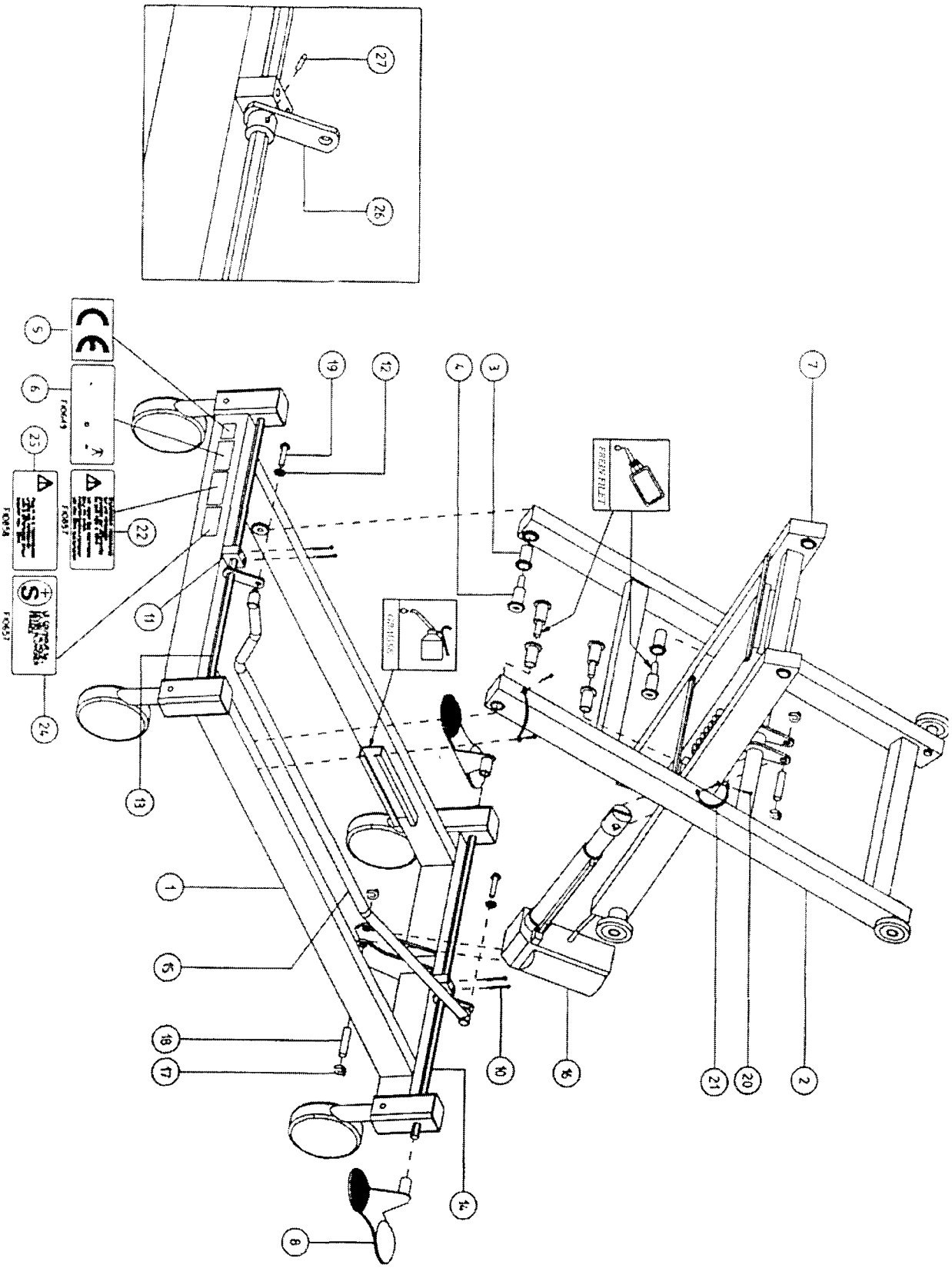
27
26
5
6
25
22
11
24
19
12
4
3
7
13
1
15
16
17
10
9
21
20
2
14
8
FOG49
FOG57
FOG54
FOG53
GREASE FILLET
GREASE

5.4.2 Base + elevation with shroud

Item	Qty.	Reference	Description
1	1	Page 5-12	Casters
2	1	Page 5-16	Crossbar without Trendelenburg / Reverse Trendelenburg
3	4	S10649	Elevation ring
4	4	S10663	Elevation pivot pin
5	1	QD0821	Label CE
6	1	Page 1-12	Label Identification
7	1	Page 5-62	Elevation arm + power unit
8	1	Page 5-18	Pedal F.U.
9	1	S30198	Hexagonal guide ring tunnel
10	4	VI0290	VAT n°8*32 TR ZB
11	2	S30356	Guide FU
12	2	VI0244	Washer L Ø 6*18 ZB
13	1	F10935	Hex rod F.U.
14	1	F10941	Hex rod F.U. single foot
15	1	LT0436	Binding FU
16	1	VE0092	Motor HL
17	4	QD0527	Truarc ring 12 springfix
18	2	S10658	Motor holding pin
19	2	VI0419	Screw BHC M6*16 ZB
20	8	VI0418	VAT n° 10*13 CBL ZB
21	2	QD0630	Ground strap 11.5 A4565801
22	1	Page 1-13	Label 30mA French-german
24	1	Page 1-13	Label S+
25	1	Page 1-13	Label 30mA English
26	1	F10265	Base shroud
27	4	VI0083	Screw brencko 4.8 x 16 ZB
28	2	LT0865	Rod F.U.
29	2	VI0486	Screw HC M8 x 8 CUV. CRANT. ZB

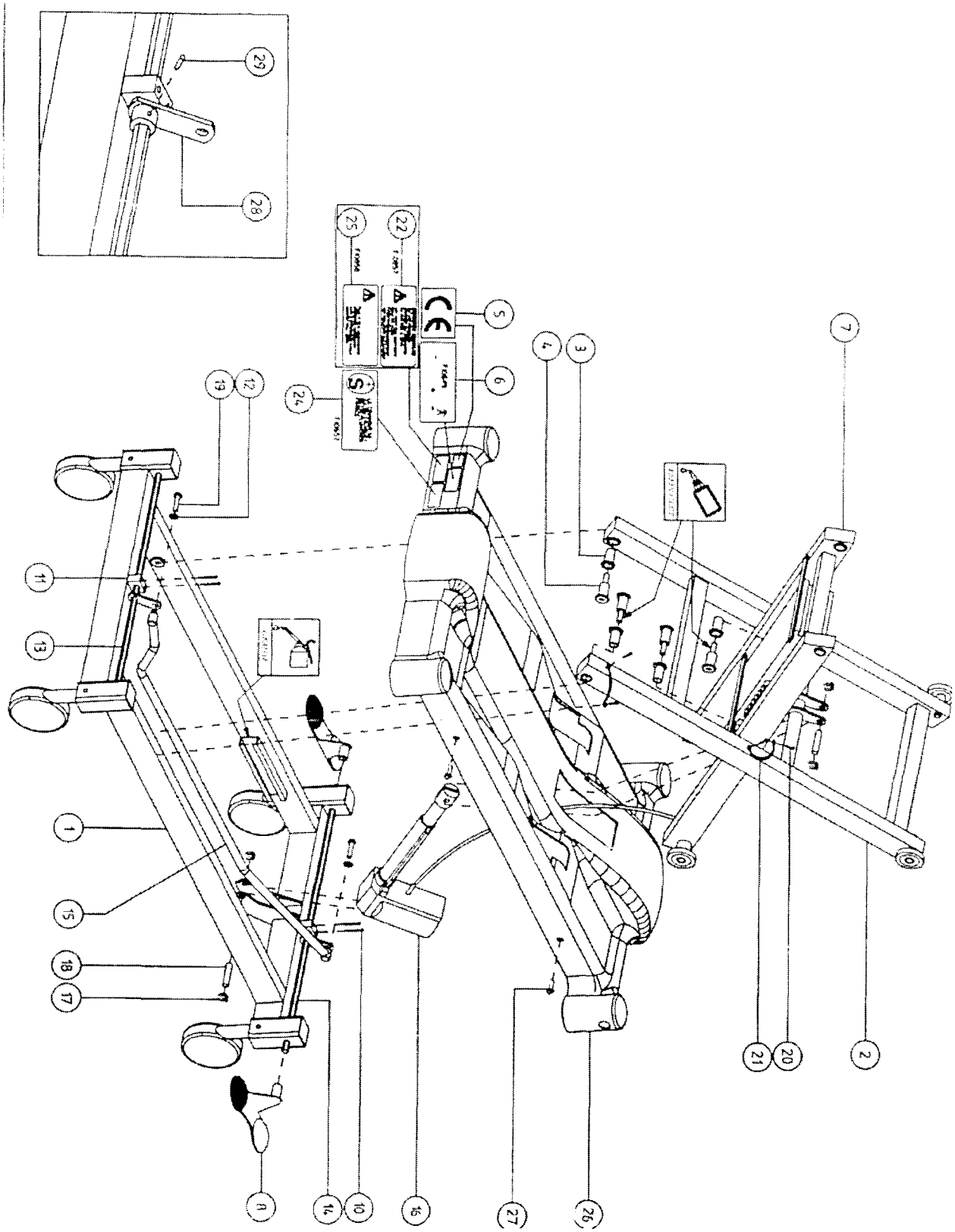
29
28
25
22
24
5
6
12
19
4
3
7
11
13
1
15
18
17
8
14
10
16
27
26
21
20
2

5.4.3 Base + Trendelenburg/Reverse Trendelenburg elevation, without shroud

Item	Qty.	Reference	Description
1	1	Page 5-12	Casters 150A
2	1	Page 5-14	Trendelenburg Reverse Trendelenburg motor crossbar
3	4	S10649	Elevation ring
4	4	S10663	Elevation pivot pin
7	1	Page 5-62	Elevation arm + power unit
5	1	QD0821	Label CE
6	1	Page 1-12	Identification label
8	1	Page 5-18	Pedal F.U.
10	4	VI0290	VAT n°8*32 TR ZB
11	2	S30356	Guide FU
12	2	VI0244	Washer L Ø 6*18 ZB
13	1	F10935	Hex rod F.U.
14	1	F10941	Hex rod F.U. single foot
15	1	LT0436	Binding FU
16	1	VE0108	Hilow motor T/RT Mégamat
17	4	QD0527	Circlip ring 12 springfix
18	2	S10658	Motor holding pin
19	2	VI0419	Screw BHC M6*16 ZB
20	8	VI0418	VAT n° 10*13 CBL ZB
21	2	QD0630	Ground strap 11.5 A4565801
22	1	Page 1-13	Label 30 mA French-German
23	1	QD1050	Label NF
24	1	Page 1-13	Label S+
25	1	Page 1-13	Label 30 mA English
26	1	S20802	Support switch P/D
27	2	VI0388	VAT N°8 x 12,7 ZB
28	2	VI0334	Screw CHC M4 x 25 8/8 ZB
29	2	S10793	Spacer D: 4,2 x 16,5 x 20
30	2	VI0460	Nut nylstop M4 SB ZB
31	2	S10753	Rod ring RBT
32	2	S10752	Rod screw RBT
33	2	LT0865	Rod F.U.
34	2	VI0486	Screw HC M8 x 8 CUV. CRANT. ZB

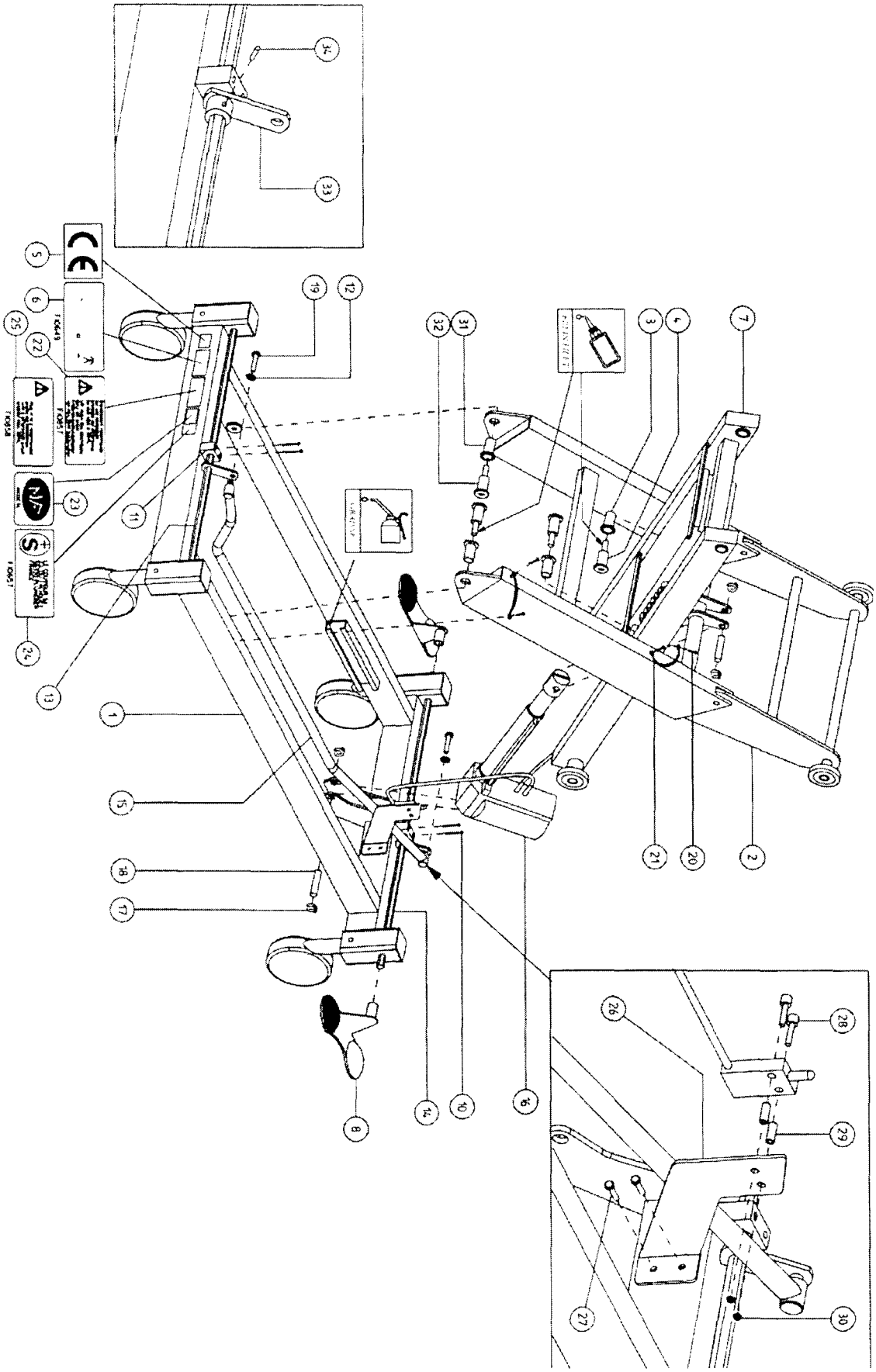
34
33
5
6
25
22
19
12
32
31
3
4
7
23
11
24
13
1
15
16
17
8
14
10
9
21
20
2
26
28
29
27
30

5.4.4 Base + Trendelenburg/Reverse Trendelenburg elevation, with shroud

Item	Qty.	Reference	Description
1	1	Page 5-12	Casters
2	1	Page 5-14	Trendelenburg / Reverse Trendelenburg motor cross bar
3	4	S10649	Elevation ring
4	4	S10663	Elevation pivot pin
5	1	QD0821	CE label
6	1	Page 1-12	Identification label
7	1	Page 5-62	Elevation arm + power unit
8	1	Page 5-?	F.U. pedals
10	4	VI0290	VAT n°8*32 TR ZB
11	2	S30356	FU guide
12	2	VI0244	Washer L Ø 6*18 ZB
13	1	F10935	Hex rod F.U.
14	1	F10941	Foot hex rod F.U.
15	1	LT0436	Binding FU
16	1	VE0108	Motor HL T./R.T. Mégamat
17	4	QD0527	Truarc ring 12 springfix
18	2	S10658	Motor attachment pin
19	2	VI0419	BHC screw M6*16 ZB
20	8	VI0418	VAT n° 10*13 CBL ZB
21	2	QD0630	Ground strap 11.5 A4565801
22	1	Page 1-13	30 mA French-German label
23	1	QD1050	NF label
24	1	Page 1-13	S+ label
25	1	Page 1-13	30 mA English label
26	1	F10893	Base cover T./R.T.
27	4	VI0083	Brencko scew 4.8 x 16 ZB
28	1	S20802	Support switch T./R.T.
29	2	VI0334	CHC screw M4 x 25 8/8 ZB
30	2	S10793	Spacer D: 4,2 x 16,5 x 20
31	2	VI0460	nylstop nut M4 SB ZB
32	2	VI0388	VAT RLZ N°8 x 12,7 ZB
33	2	S10753	Rod bush HS
34	2	S10752	Rod screw HS
35	2	LT0865	Rod F.U.
36	2	VI0486	Screw HC M8 x 8CUV. CRANT. ZB

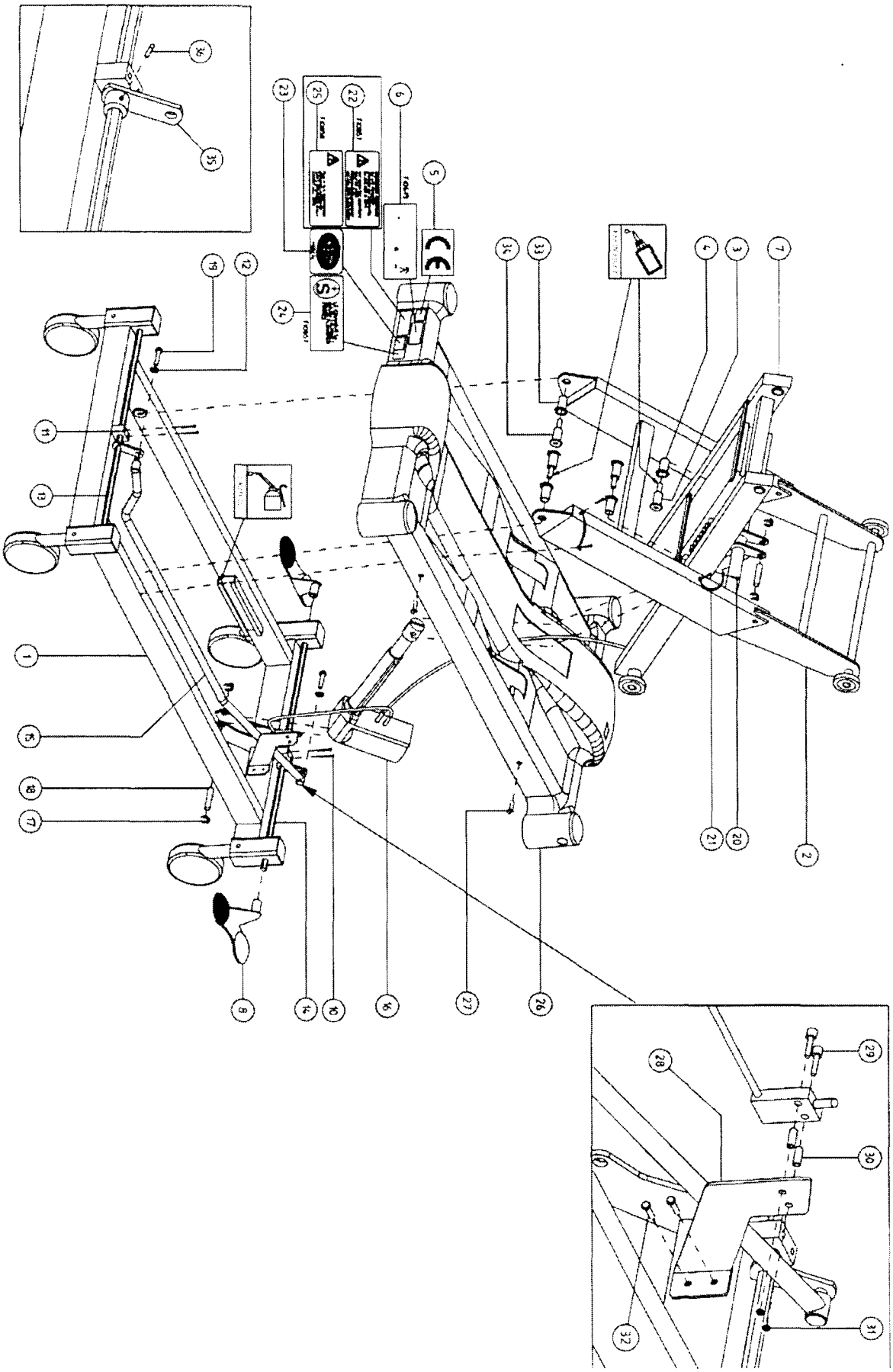
1
2
3
4
5
6
7
8
9
10
11
12
13
14
15
16
17
18
19
20
21
22
23
24
25
26
27
28
29
30
31
32
33
34
35
36

5.4.5 Casters

Item	Qty.	Reference	Description
1	1	LT0561	Electrical base
2	4	S30298	Base 50*50
3	4	S30299	Caster holder
7	8	VI0376	Star washers. 8*14 ZB
8	8	VI0446	Screw BHC M8*20 ZB
			Casters Ø : 125 S.G.
4-6	3	RO0067	Caster 2476 PJX 150 R26 LN48
5	1	RO0068	Steering caster 2474 PJX 150 R26 LN48
			Casters Ø : 125 S.G.
4-6	3	RO0018	Caster D:125 FU
5	1	RO0020	Steering caster D:125 FU
			Anti-static casters Ø : 150 S.G
4	1	RO0067	Caster 2476 PJX 150 R26 LN48
5	1	RO0068	Steering caster 2474 PJX 150 R26 LN48
6	2	RO0084	Beige anti-static caster D:150 PJX
			Anti-static casters Ø : 150 S.G. 30°
4	1	RO0091	Central brake caster S.G. D:150 30D
5	1	RO0092	Steering caster S.G. D:150 30 D
6	2	RO0093	Anti-static brake caster S.G. D:150 30D
			Casters Ø : 125 D.G.
4-6	3	RO0090	Caster 2946 UAP 125 R26 LN
5	1	RO0089	Steering caster 2944 UAP 125 R26 LN
			Casters Ø : 150 D.G.
4-6	3	RO0075	Caster D : 150 DG beige
5	1	RO0076	Beige Steering caster D : 150 DG
			Anti-static casters Ø : 150 D.G
4	1	RO0075	Beige caster D : 150 DG
5	1	RO0076	Beige Steering caster D : 150 DG
6	2	RO0085	Beige anti-static caster D : 150 DG
			Casters Ø : 150 S.G. 30°
4-6	3	RO0091	Central brake caster. S.G. D:150 30D
5	1	RO0092	Steering caster S.G. D:150 30 D

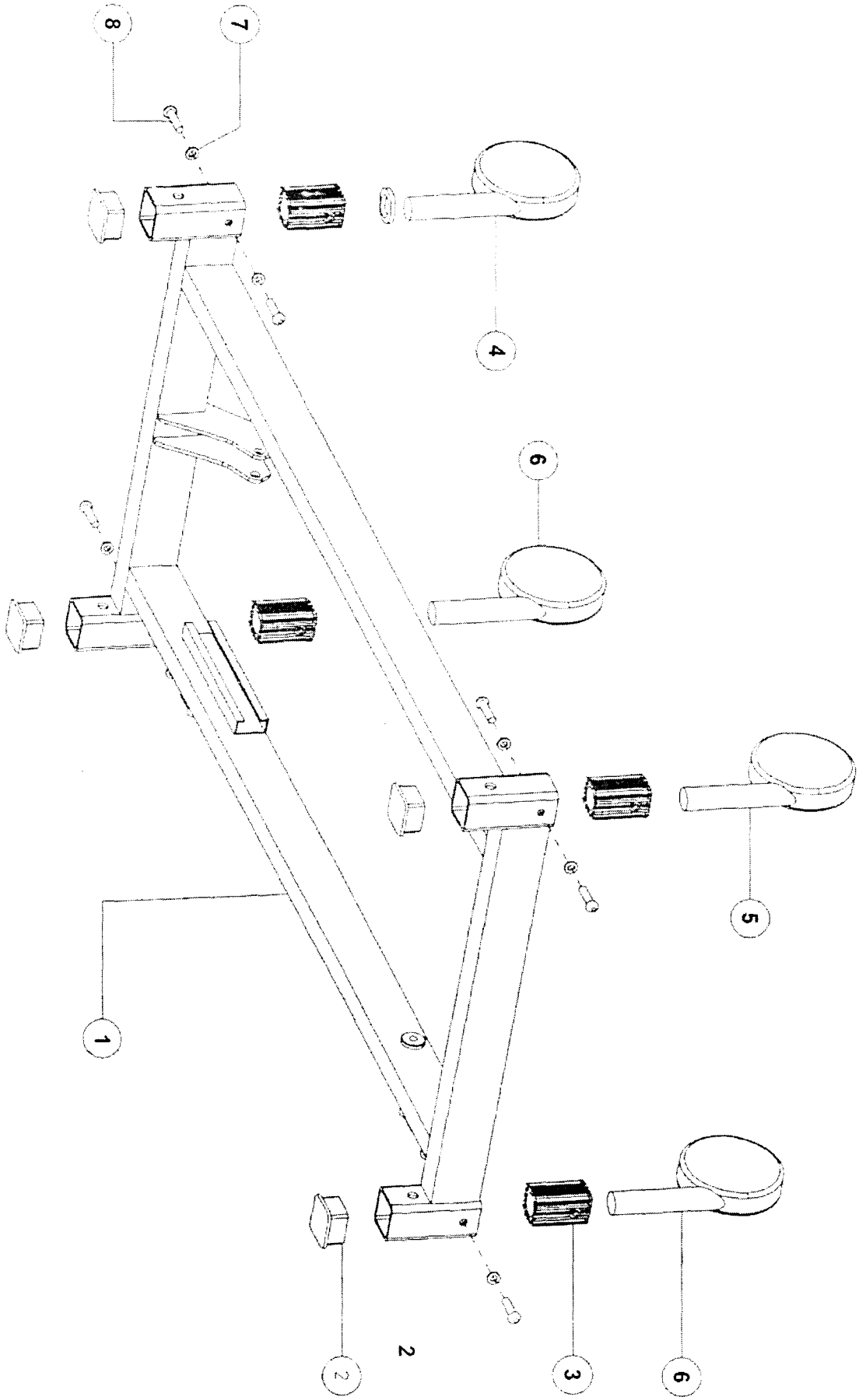
8
7
4
6
5
1
2
3
6
2

5.4.7 Crossbar without Trendelenburg/Reverse Trendelenburg

Item	Qty.	Reference	Description
1	1	LT0564	Crossbar motor
2	2	S30367	Motor crossbar base
3	2	QD0215	Bearing 6202
4	2	S10705	Bearing shaft end
5	2	S30365	Crossbar base

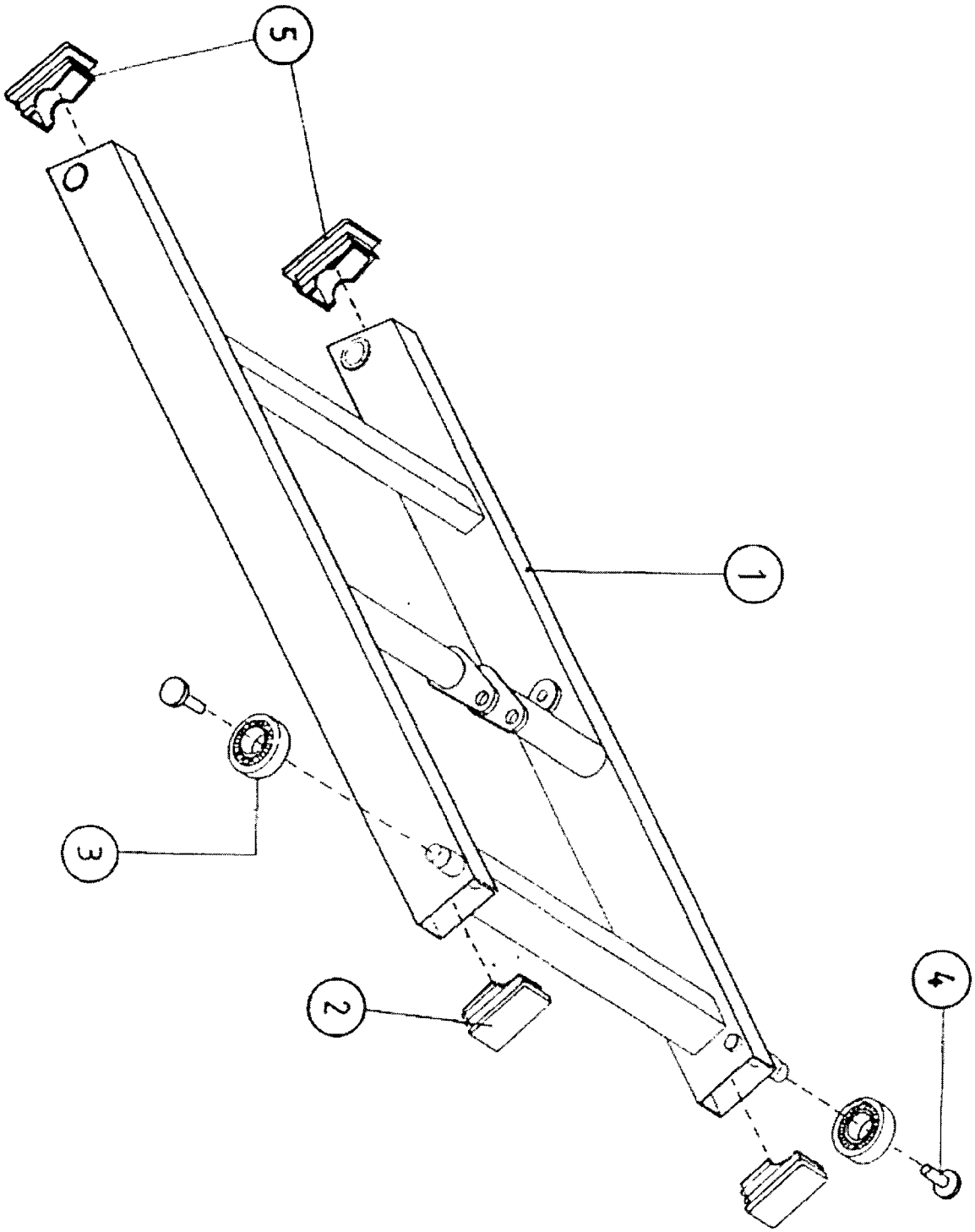
5
1
3
2
4

5.4.8 Brake pedal

Item	Qty.	Reference	Description
1	2	LT0271	Pedal FU
2	4	S10653	Pedal washer
3	4	VI0419	Screw BHC M6*16 ZB
4	2	VI0486	Screw HC M8* Cuv. crant brut
5	2	S30279	Pedal FU Green top piece
6	2	S30248	Pedal FU Beige top piece

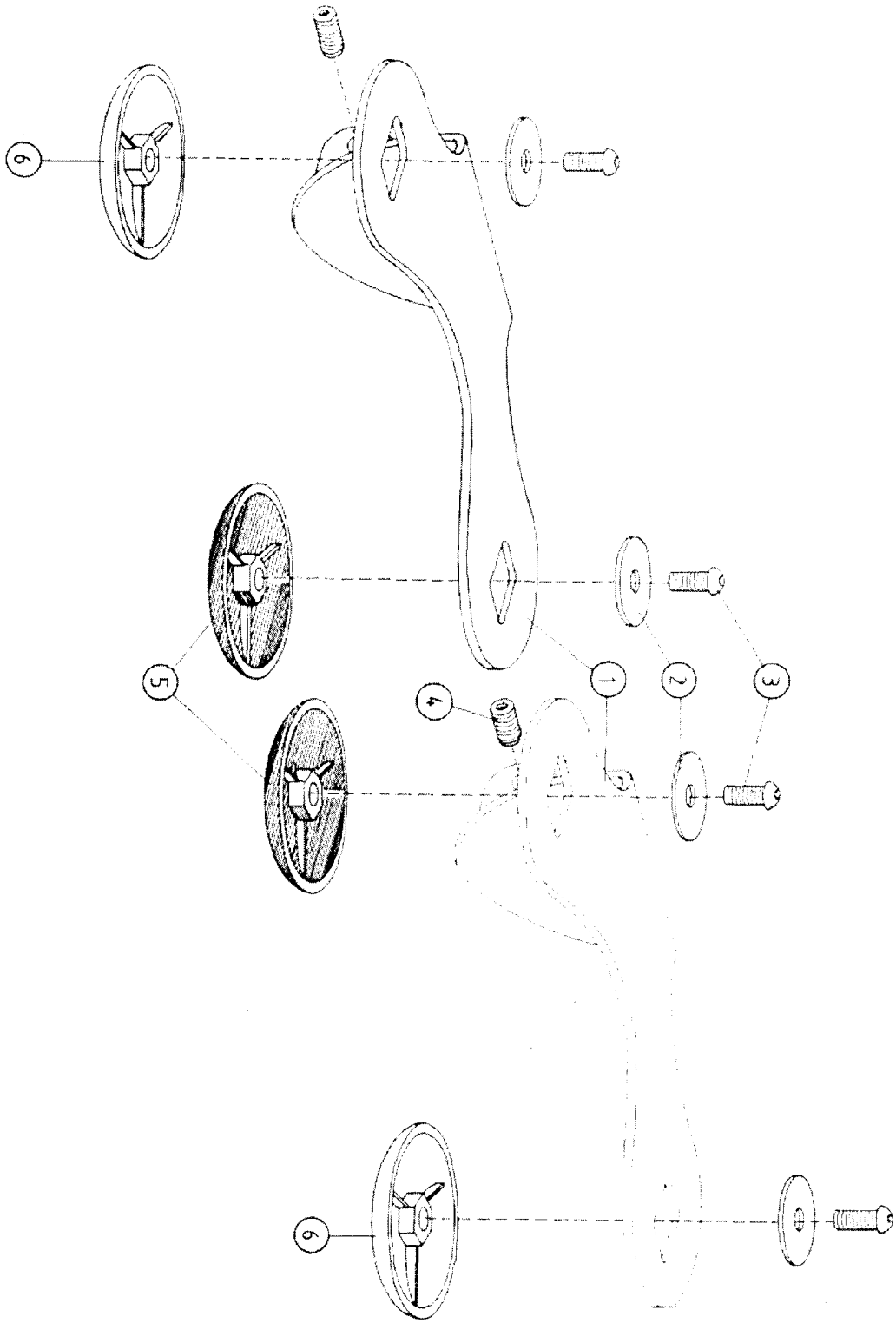
6
5
4
1
2
3
6

5.4.9 Brake system

Item	Qty.	Reference	Description
1	2	LT0865	SINGLE BRAKE ROD
2	1	F10940	FOOT HEX ROD F.U.
3	1	F10935	HEX ROD F.U.
4	2	S30356	SINGLE BRAKE GUIDE
5	2	VI0244	WASHER L D6 x 18 ZB
6	4	VI0290	VAT N°8 x 32 TR ZB
7	4	VI0486	SCREW HC M8 x 8 CUV. CRANT. ZB
8	2	VI0419	SCREW BHC M6 x 16 ZB
9	2	S10596	SINGLE BRAKE SPACER
10	1	LT0867	TOTAL WIDTH PEDAL F.U.
11	1	LT0436	BINDING F.U.

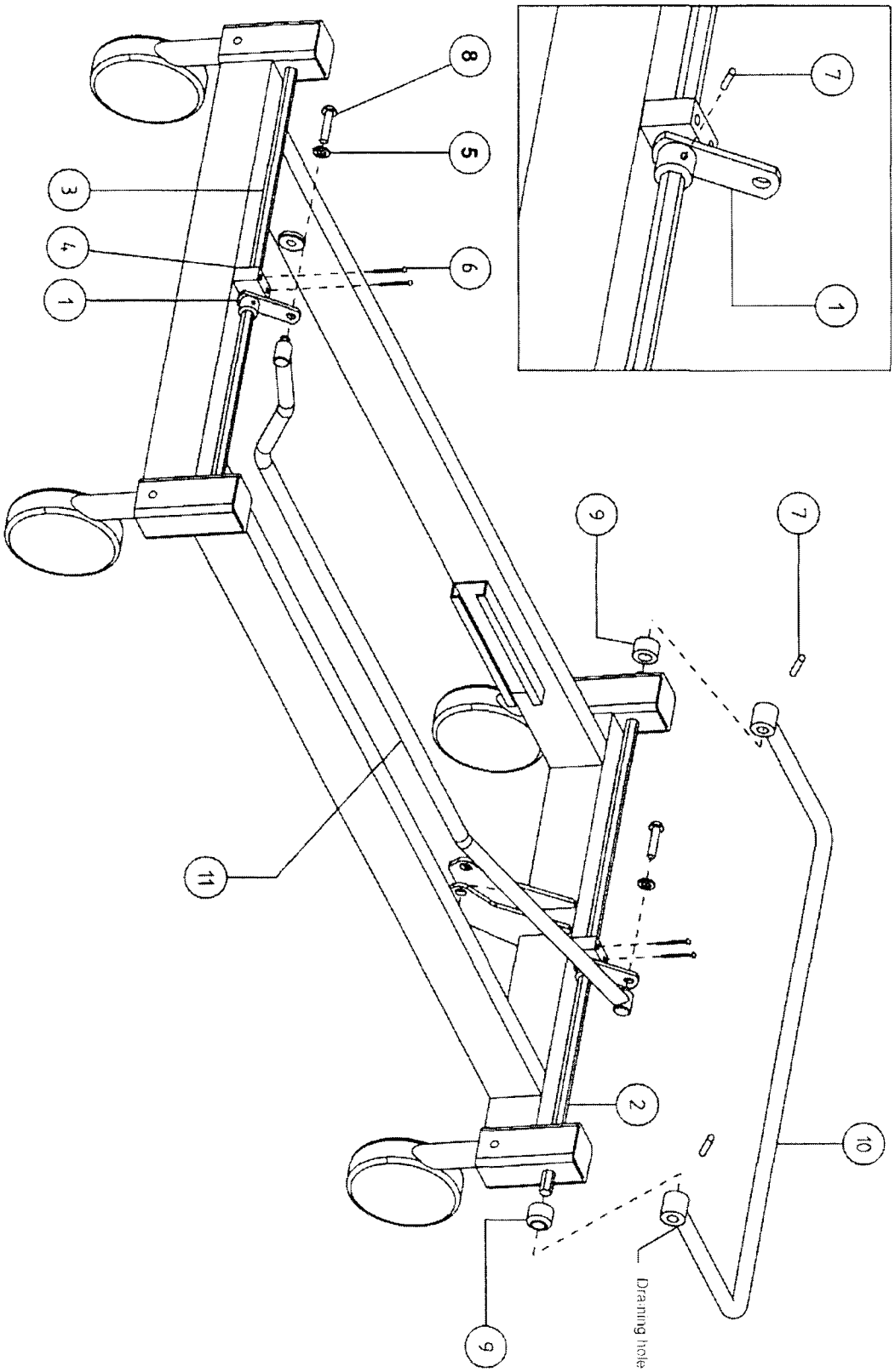
7
1
10
Drawing hole
9
2
11
9
7
6
1
4
3
5
8

5.4.10 Frame

Item	Qty.	Reference	Description
1	1	LT0855	Bed frame HS
2	2	VI0345	Screw FHC/90 M8*25 ZB
3	2	S30140	Accessory holder Ring
4	2	VI0378	Washer 8*30 ép.2 ZB
5	2	VI0367	Nut nylstop M8 SB ZB
7	1	VI0159	Nut nylstop HM6 ZB
8	1	VI0371	Washer 6*12 ZB
9	1	QD0981	White pad
10	1	VI0221	Screw F/90 M6*20 Pozid ZB
11	4	S10282	Nut for bushing PS
12	4	S30151	Rod bushing PS
13	2	S30292	Pole ring Ergolit
14	2	VI0426	Screw plast.T45 CBL 4*10 ZB
15	4	VI0417	VAT N°10*19 CBC ZB
16	2	F10497	Accessory holder tray
17	1	QD1050	NF MEDICAL label (Destination France - Switzerland)
or	1	QD1049	ARNOLD label (Destination Germany)
18	4	QD0950	Stop cap BPF 7/8 white
19	1	QD0544	Set of 2 side-rails position labels/LP
20	1	QD1218	COMMERCIAL label (Destination France - Switzerland)

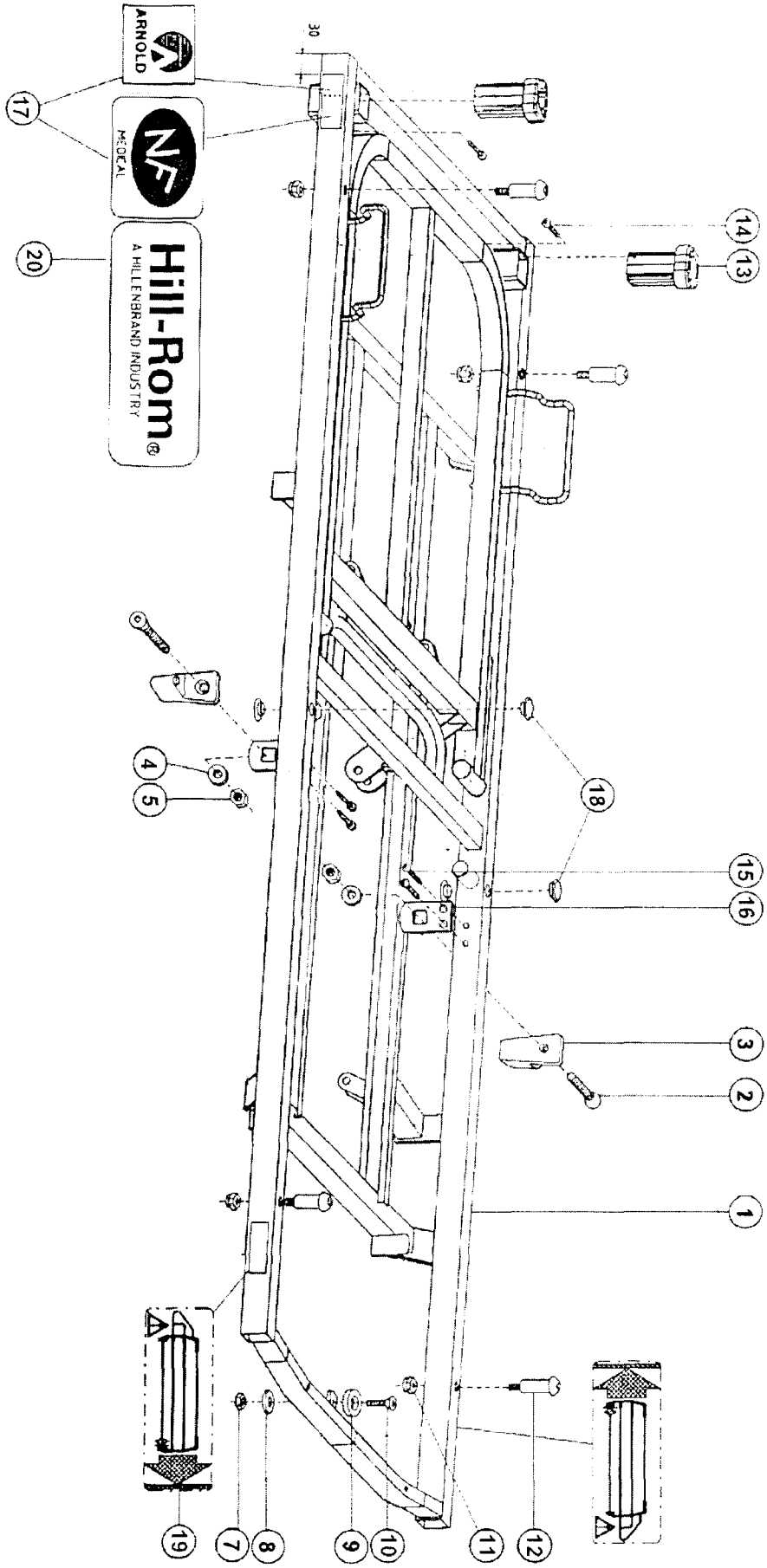
ARNOLD
MEDICAL
Hill-Rom
A HILLENBRAND INDUSTRY
30
1
2
3
4
5
7
8
9
10
11
12
13
14
15
16
17
18
19
20

5.4.11 Frame on Trendelenburg/Reverse Trendelenburg elevation

Item	Qty.	Reference	Description
1	1	LT0855	Bed frame HS
2	2	S10649	Elevation ring
3	2	S10663	Elevation pivot pin

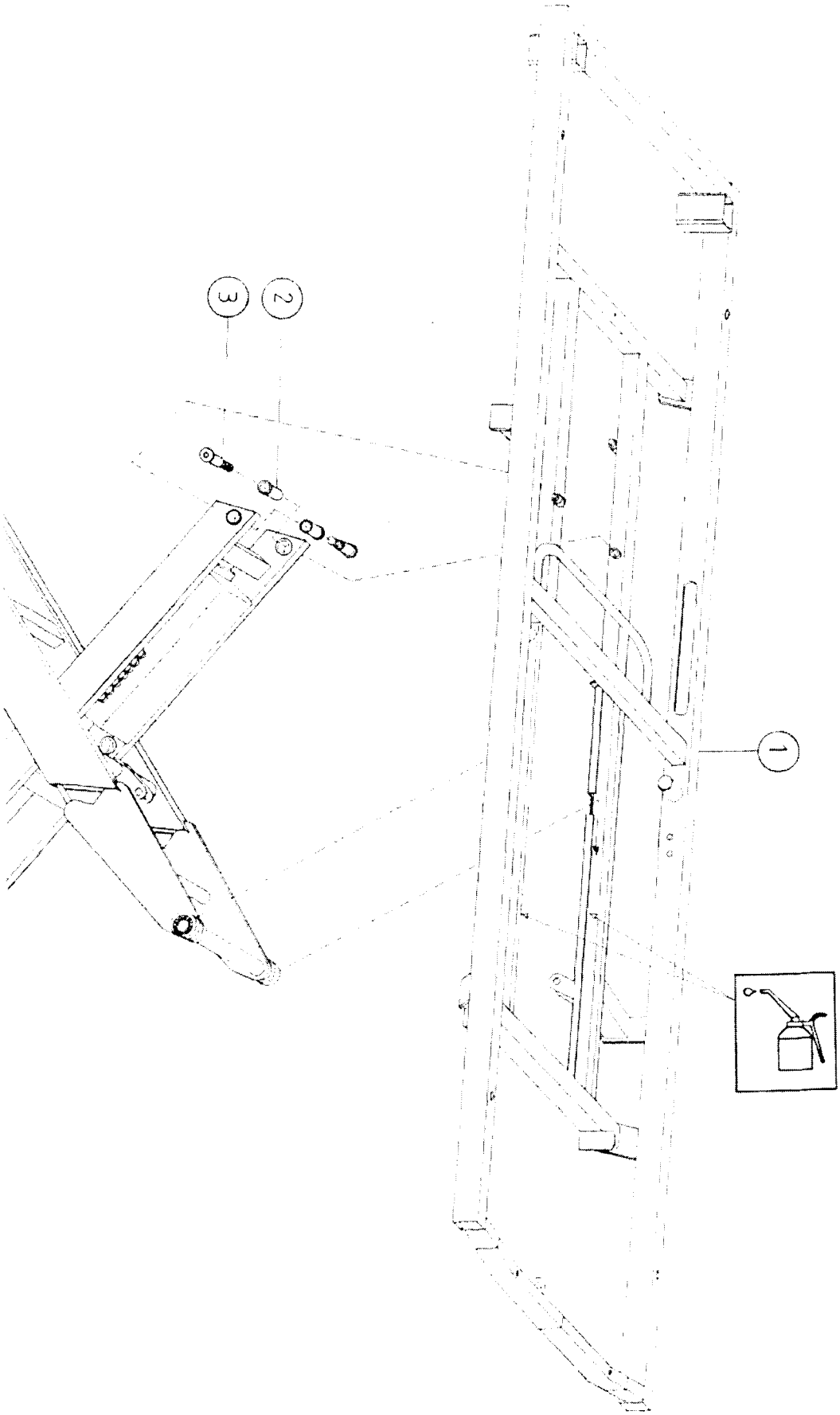
3
2
1

5.4.12 Head section clutch

Item	Qty.	Reference	Description
1	1	LT0856	CLUTCH HANDLE HS
2	1	VI0371	WASHER 6*12 Z.B
3	1	QD1214	CLUTCH SLEEVE HS
4	2	S30442	CLUTCH HANDLE BEARING
5	1	QD1211	CLUTCH CABLE
6	1	QD1203	LABEL
7	2	QD1212	BEIGE PLASTIC HANDLE
8	2	VI0093	IRON SCREW TR N10*32 Z.B
9	1	VI0344	SCREW BHC M6*10 Z.B
10	1	VE0090	INTEGRATED CLUTCH DEWERT MOTOR
11	1	S10658	MOTOR HOLDING PIN
12	2	QD0527	TRUARC RING D:12 SPRINGFIX
13	2	VI0446	SCREW BHC M8 x 20 ZB
14	1	QD1175	POTENTIAL EQUALIZING TERMINAL
15	1	QD0580	RING FR-POAG-S 4B1 . 071 . 01
16	1	S10859	PIN D: 12 6 PANS
17	1	S10593	SPACER 12,2 x 18 L12,5
18	1	QD1161	VITADRESSE LABEL 19 x 13 WHITE
19	3	QD0808	CLAMP SES 380/4,7 SL HT-C
20	2	VI0376	STAR WASHERS. 8*14 Z.B

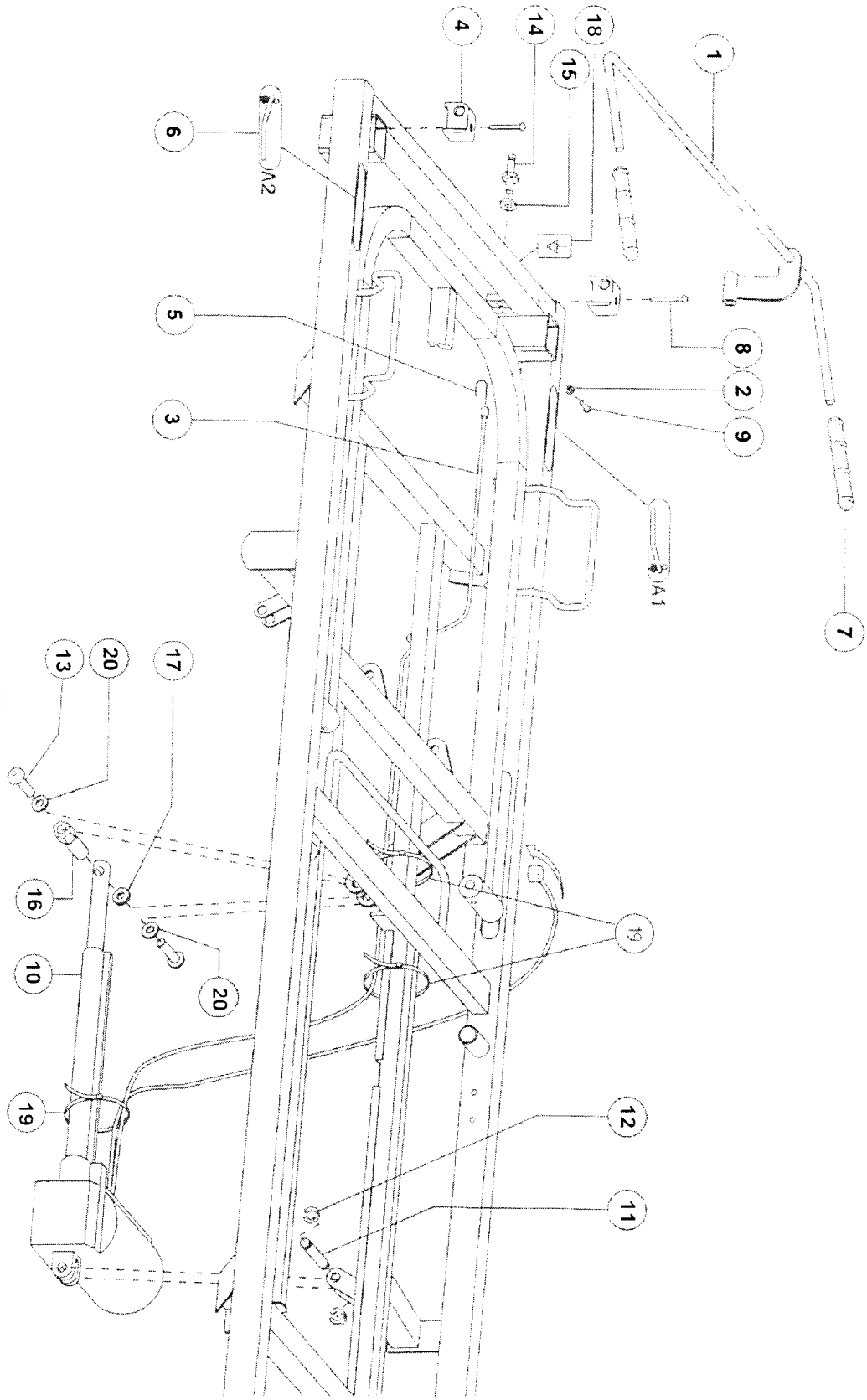
1
2
3
4
5
6
7
8
9
10
11
12
13
14
15
16
17
18
19
20
A1
A2

5.4.13 Trendelenburg/Reverse Trendelenburg handle

Item	Qty.	Reference	Description
1	1	S10852	Handle T./R.T.
2	1	LT0841	Handle support T./R.T.
3	2	QD0972	Base EAOS MCR 30 x 15 dark beige
4	1	S10480	Plastic ring T./R.T.
5	1	S10678	Ring 647A fixed
6	1	QD0526	Truarc Ring D:10 springfix
7	1	QD1166	Cable and sleeve T./R.T. Gérialit
8	2	VE0109	Gas cylinder T./R.T. 1100N
9	2	VI0392	Nut HM10 x 100 H = 6 ZB
10	2	QD1189	Release head
11	1	QD1187	Reverse Trendelenburg label
12	2	QD1190	Release lever
13	2	S10841	Trendelenburg / Reverse Trendelenburg stop

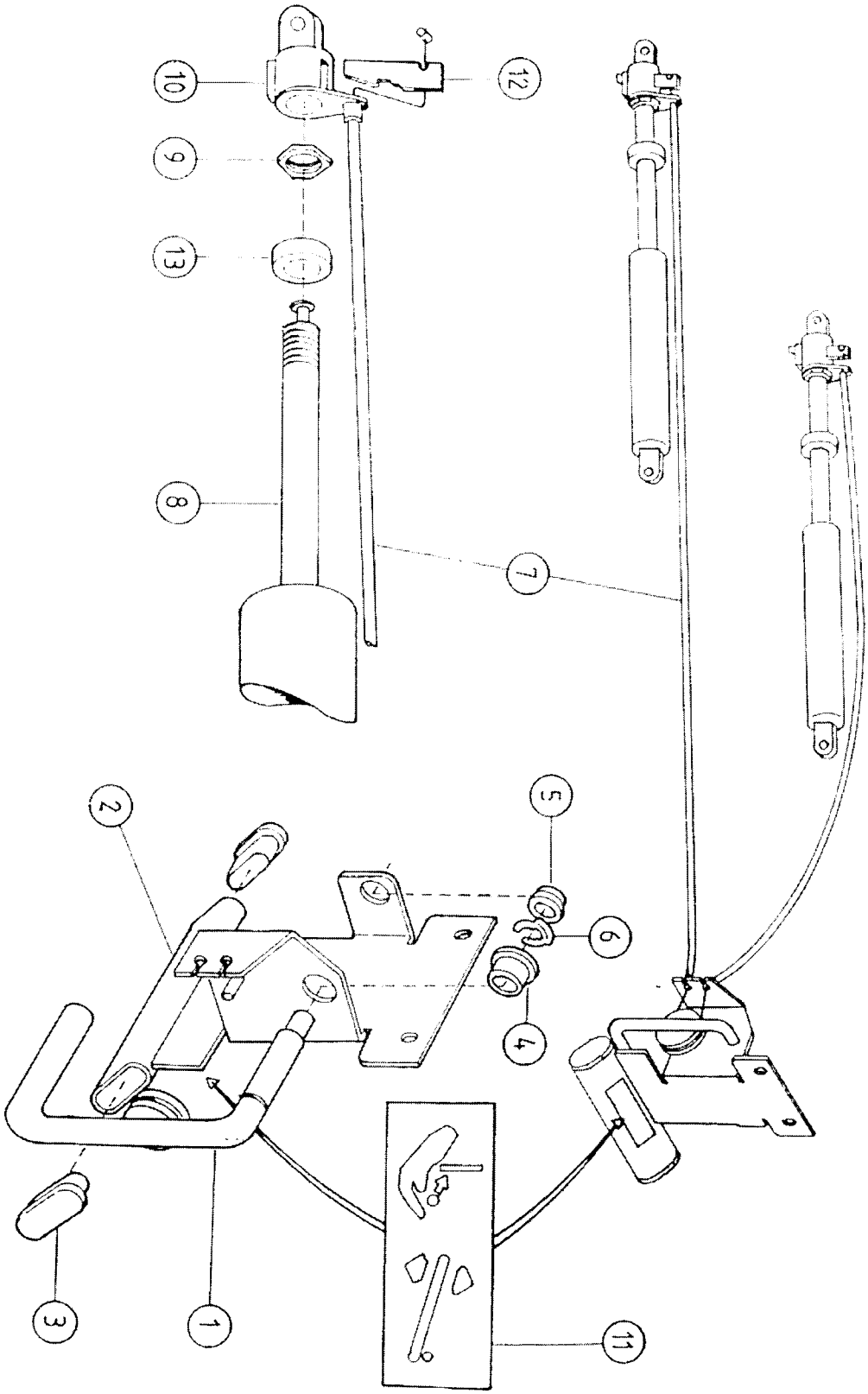
10
9
13
8
2
3
1
12
7
5
6
4
11

5.4.14 T/RT release on frame or extender

Item	Qty.	Reference	Description
1	1	Page 5-28	Reverse Trendelenburg handle
2	1	Page 5-24	HS bed frame on Reverse Trendelenburg elevation
3	2	VI0446	Screw BHC M8 x 20 ZB
4	2	VI0373	Washer 8*16 EP:1.5 ZB
5	2	VI0186	Insert CD M8KT30 steel
6	2	QD0404	Clamp 186 - 210
7	1	QD1215	Label NON T./R.T. (IF NO T./R.T. OPTION)

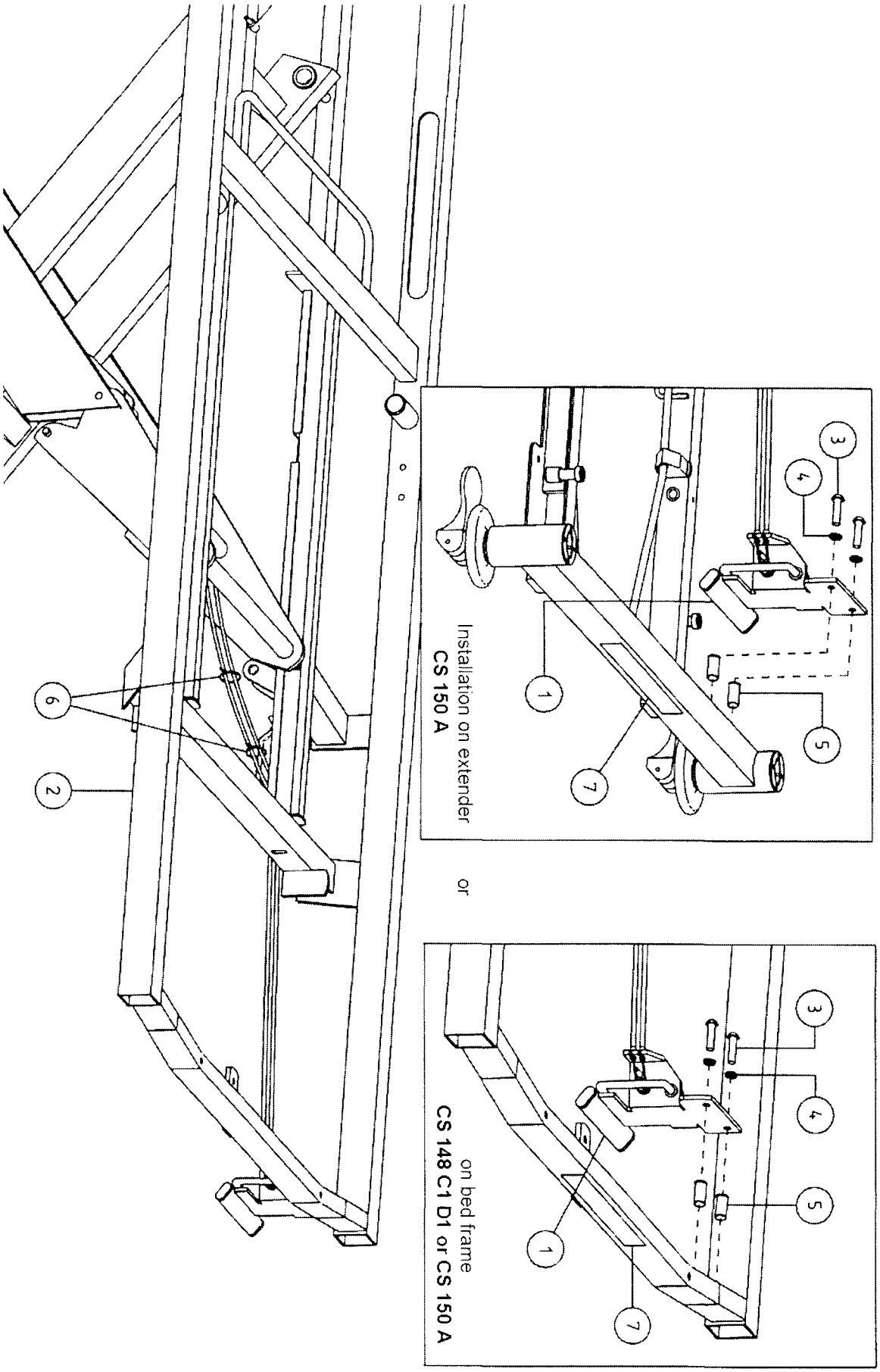
3
4
5
1
7
Installation on extender
CS 150 A
or
3
4
5
1
7
on bed frame
CS 148 C1 D1 or CS 150 A
6
2

5.4.15 Head bumper support

Item	Qty.	Reference	Description
1	2	QD0414	DECORATOR STARLOCK D=8 STAINLESS STEEL
2	2	S30099	LIGHT BEIGE BOARD STOP
3	2	S10187	SPACER REF : 7122108
4	1	S10429	SCREWED ROD M 6 L=65 Z. BICH
5	2	VI0446	SCREW BHC M8 x 20 ZB
6	2	VI0373	WASHER 8 x 16 EP. 1,5 ZB
7	1	S30137	POLE BUMPER ROLLER
8	1	LT0862	POLE YOKE
9	2	VI0186	INSERT CD M8KT30 STEEL
10	2	QD1060	STOP CAP D : 11,1 BLANC

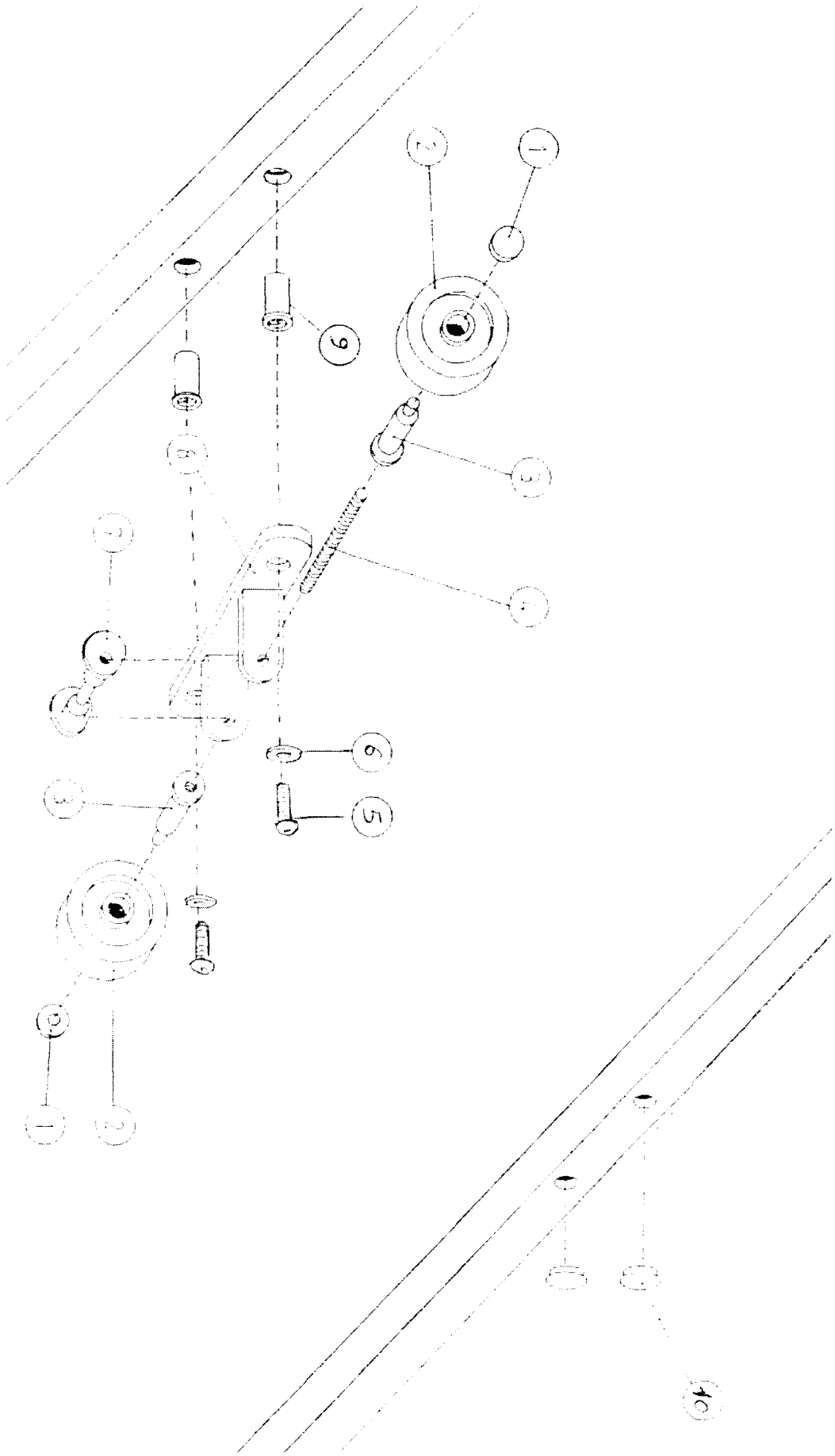
1
2
3
4
5
6
7
8
9
10

5.4.16 Board quick assembly system

Item	Qty.	Reference	Description
1	2	LT0858	Quick assembly
2	2	S20312	Clip spring
3	2	S20317	Spring supporting washer
4	2	S30336	Stop D : 100
5	2	S20318	Cam supporting washer
6	2	QD0474	Pin GO7 4x20 stainless steel
7	2	S20315	Tie bolt
8	2	S20316	Square recess washer
9	2	S30233	Elastic stop
10	2	S30232	Fastening clamp
11	2	S30231	Dark beige fastening cam
12	2	QD0475	Pin GO7 4x28 stainless steel
13	2	VI0446	Screw BHC M8 x 20 ZB
14	2	VI0376	Star washers. 8 x 14 ZB

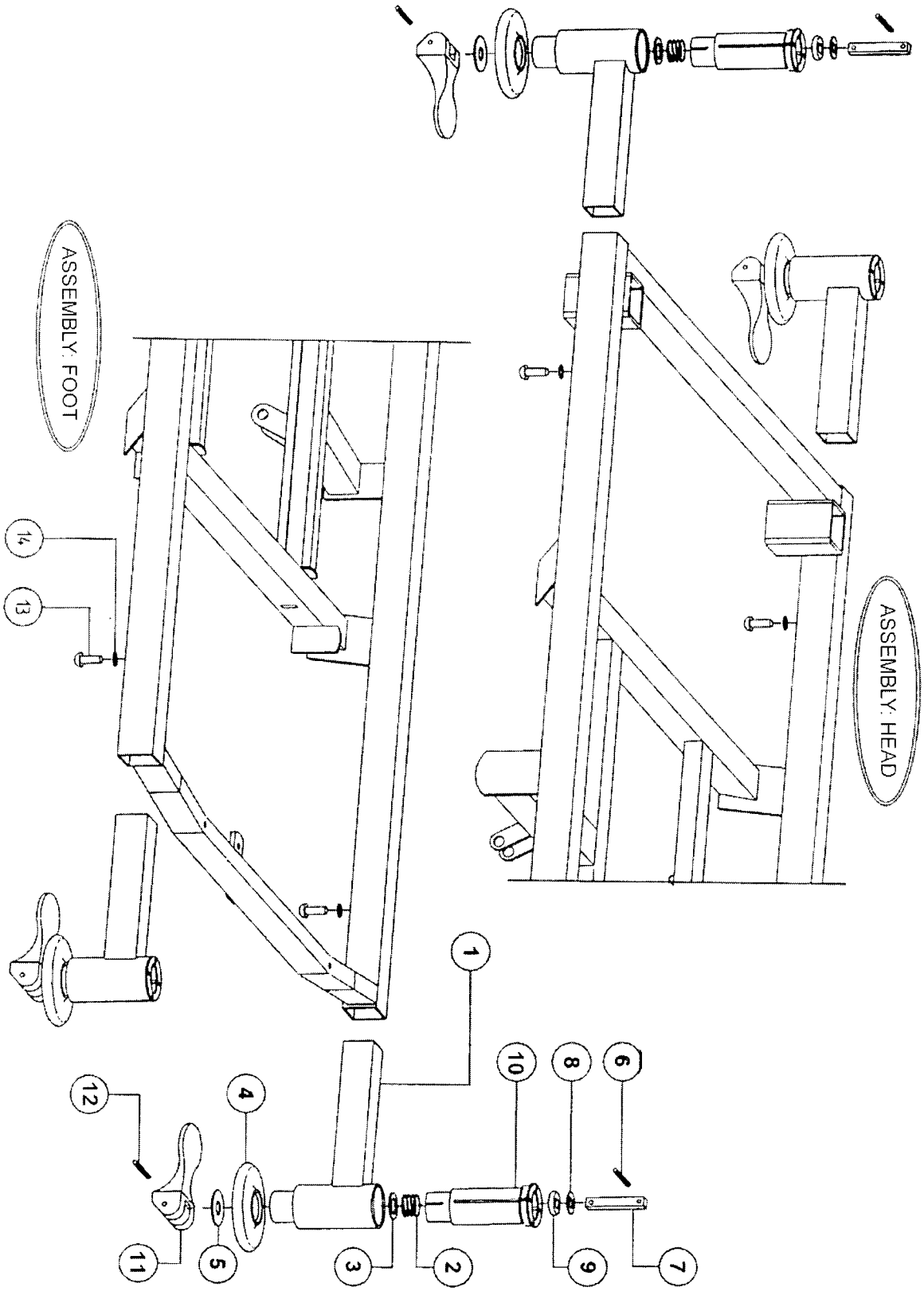
ASSEMBLY: HEAD
ASSEMBLY: FOOT
1
2
3
4
5
6
7
8
9
10
11
12
13
14

5.4.17 Extender on frame

Item	Qty.	Reference	DESCRIPTION
1	1	LT0852	Extender
2	1	LT0853	Extender sleeve
3	1	LT0854	Right extender slide
4	1	LT0857	Left extender slide
5	2	VI0428	Screw H M8x55 ZB
6	3	VI0373	Washer 8x16 ep:1.5 ZB
7	1	F10931	Extender handle
8	2	S30314	Extender handle block
9	4	S30315	Extender pad
10	12	VI0402	Screw plasgob 5x12 ZB
11	1	VI0446	Screw BHC M8x20 ZB
12	2	QD0680	Base EAD 40x40x1.3 white
13	1	VI0186	Insert CD M8KT30 Steel
14	2	VI0418	VAT N°10 x 30 CBL ZB
15	1	QD0692	Ground strap HR 4565803
16	1	QD1218	Commercial label
17	1	QD1050	MEDICAL NF LOGO LABEL

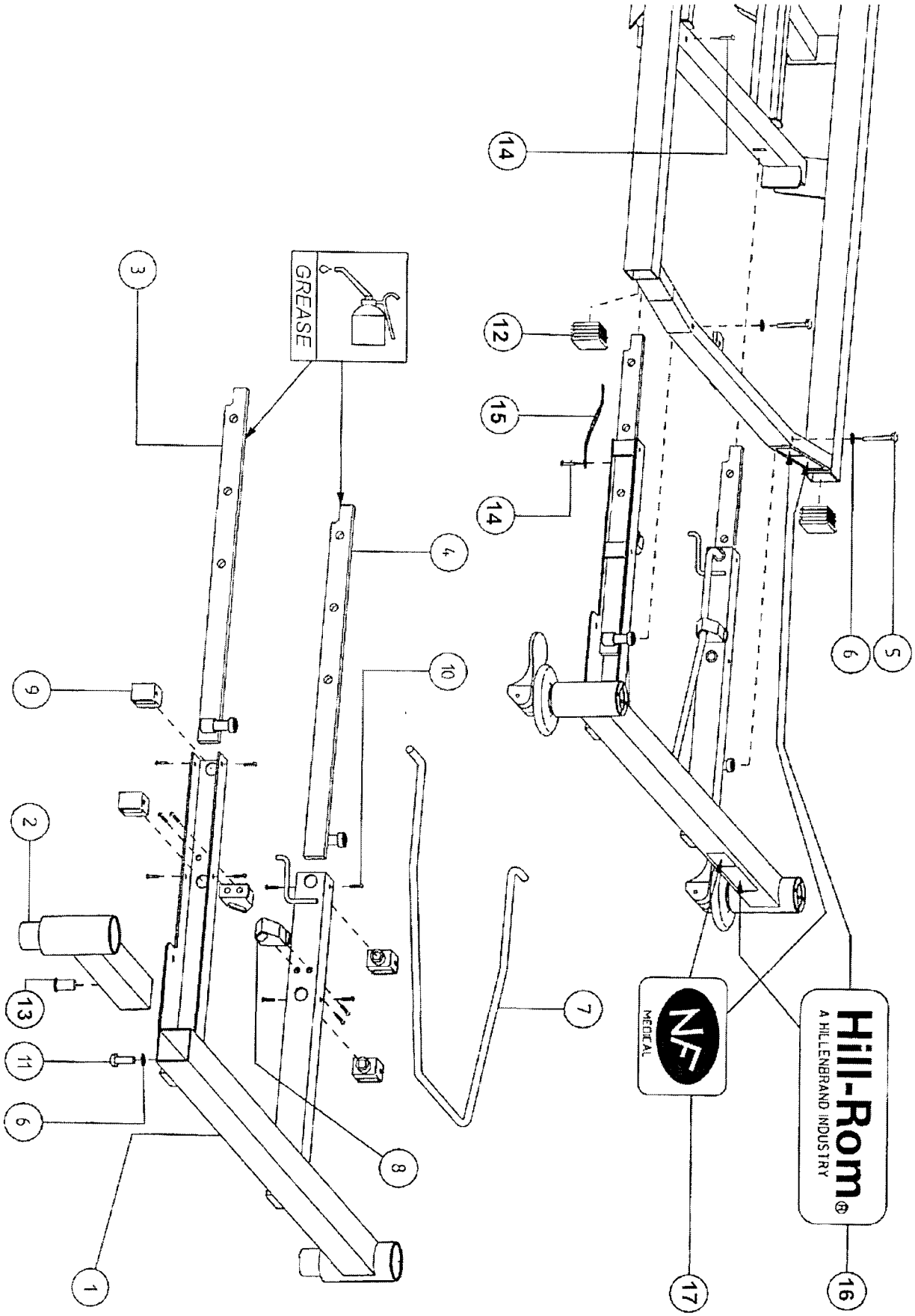
GREASE
Hill-Rom
A HILLENBRAND INDUSTRY
MEDICAL

5.4.18 Linen holder on frame

Item	Qty.	Reference	Description
1	2	VI0446	Screw BHC M8*20 ZB
2	2	VI0373	Washer 8*16 ép.1.5 ZB
3	1	LT0855	Bed frame HS
4	2	VI0376	Star washers. 8*14 ZB
5	2	VI0484	Screw TBHC 10.9ZN 8*25 ISO
6	1	S20694	Linen holder flange
7	2	VI0515	Screw for plastic TF Ø 4*20 ZB
8	1	F10883	Linen holder tray
9	2	S30395	Linen holder flange pivot
10	1	LT0547	Left linen holder guide support
11	2	S30396	Linen holder guide
12	1	LT0548	Right linen holder guide support
13	6	VI0402	Screw plasgob 5*12 ZB
14	1	Page 1-13	Maximum weight label. 15 Kg

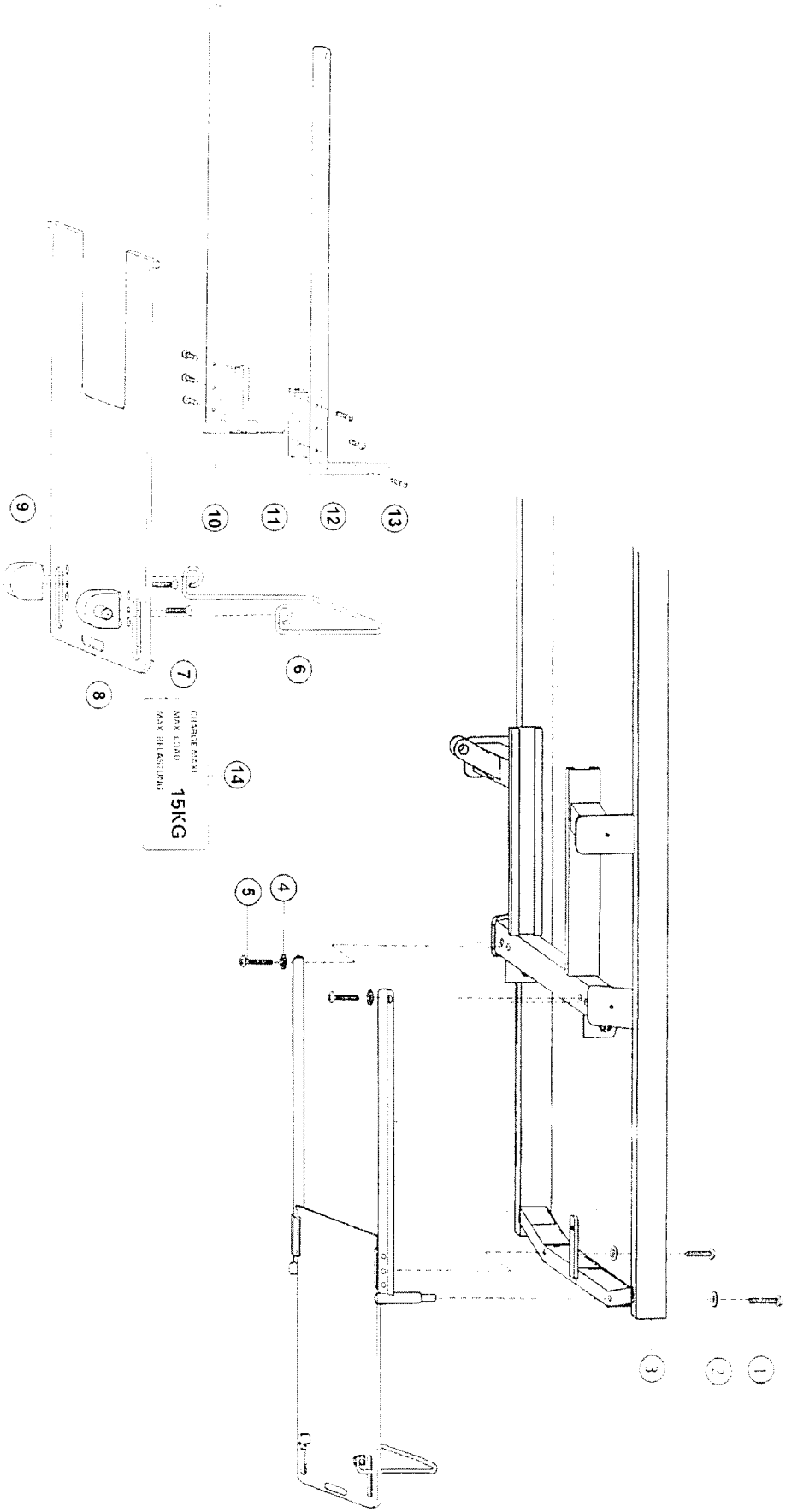
15KG

5.4.19 Linen holder on extender

Item	Qty.	Reference	Description
1	4	VI0389	Screw HM5 x 40 8/8 ZB
2	4	VI0370	Nut nylstop SB M5 ZB
3	4	S10855	Pad
4	1	F10883	Linen holder tray Ep: 8
5	2	S30395	Linen holder flange pivot
6	1	S20694	Linen holder flange
7	2	VI0515	Screw for plastic TF D4 x 20 ZB
8	1	QD1160	Label vitadresse 67 x 30 whitehe

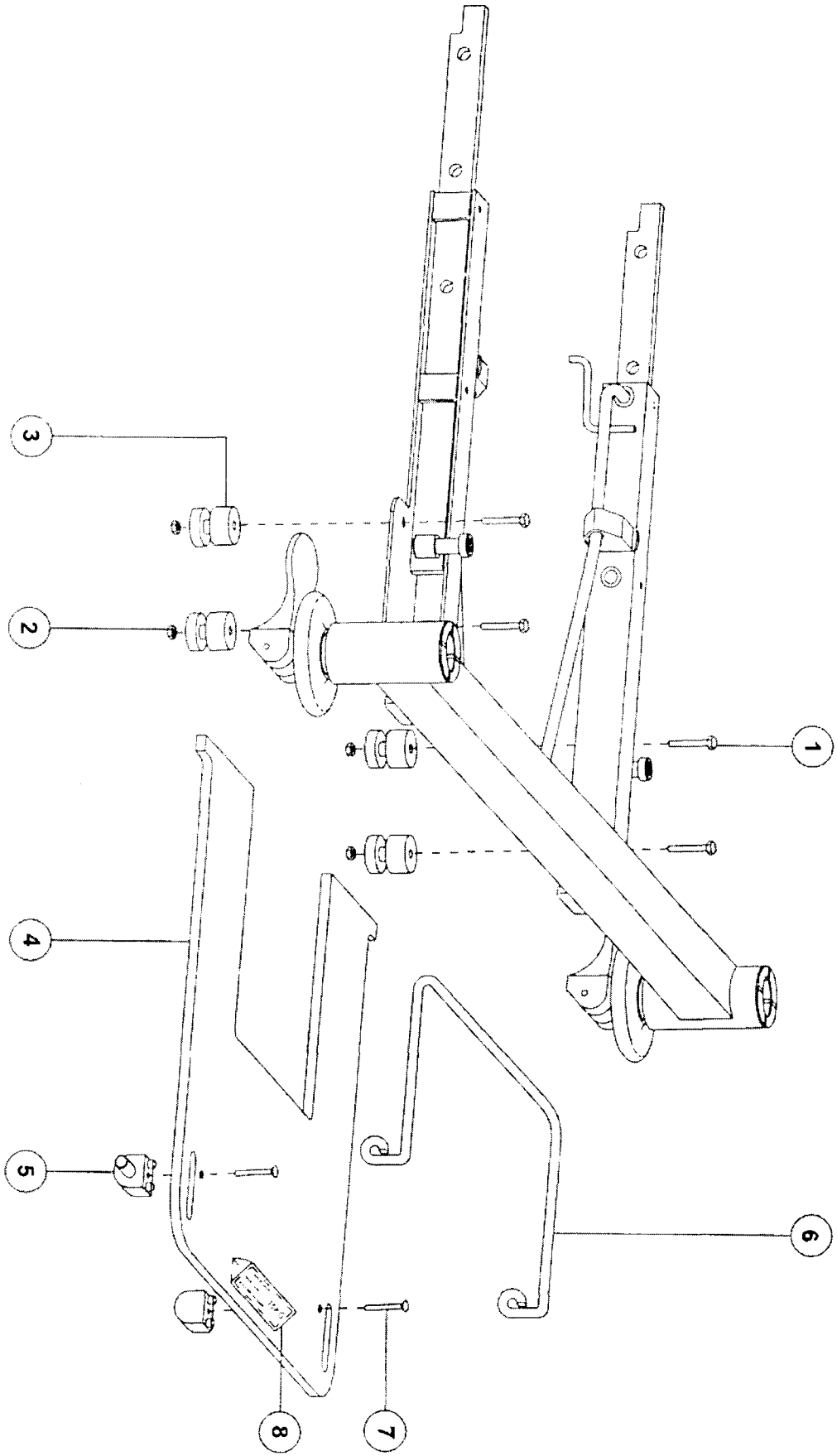
1
2
3
4
5
6
7
8

5.4.20 Side protections

Item	Qty.	Reference	Description
1	2	S30447	Short side protection
2	2	S30448	Long side protection

5

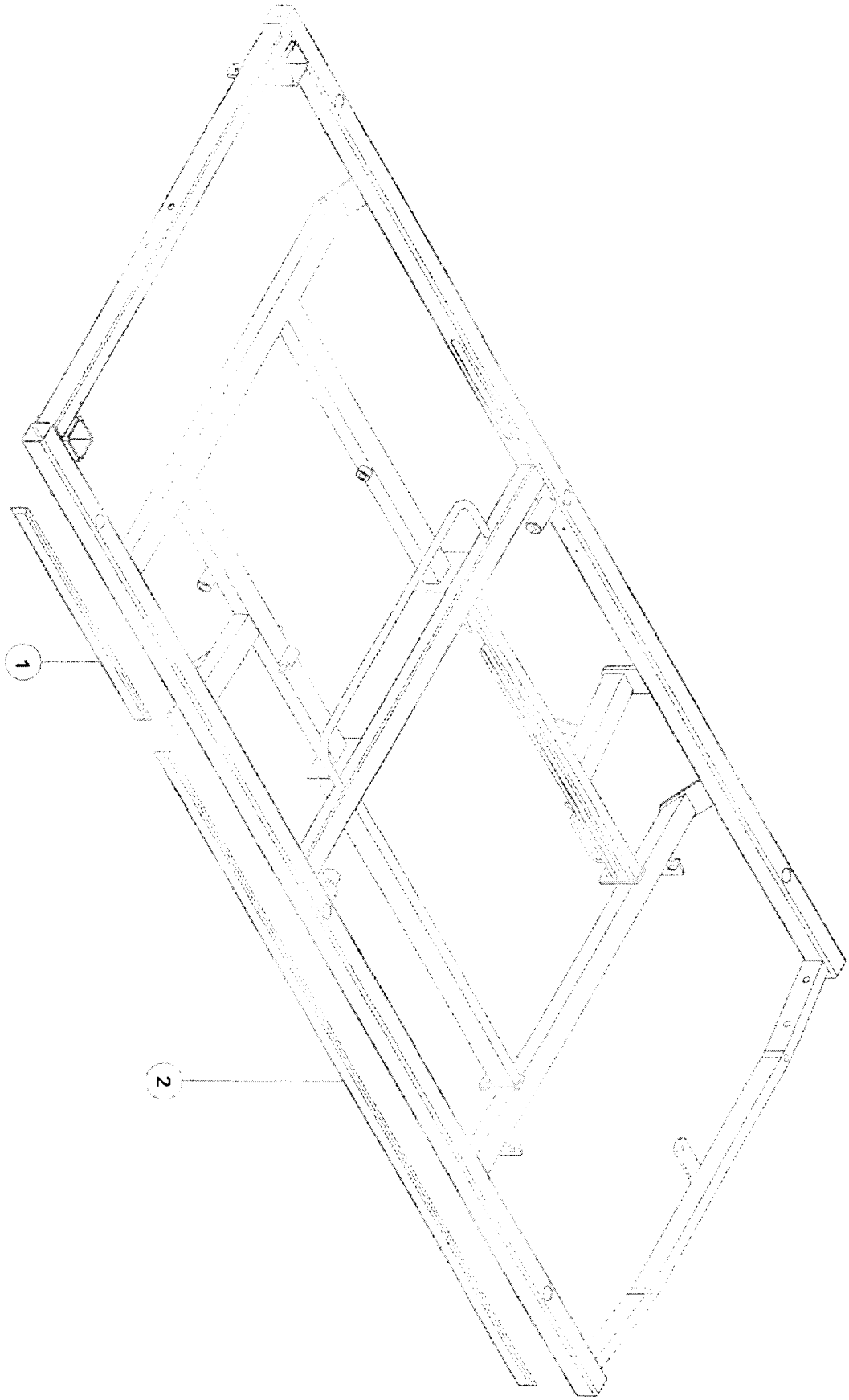
1
2

5.4.21 Accessory holding bar

Item	Qty.	Reference	Description
1	2	S20818	ACCESSORY HOLDING BAR
2	8	S20819	ACCESSORY HOLDING BAR SUPPORT
3	8	VI0344	SCREW BHC M6 x 10 ZB
4	8	S10861	SPACER B.P. ACCESSORIES
5	8	VI0539	SCREW BHC M6 x 50 ZB

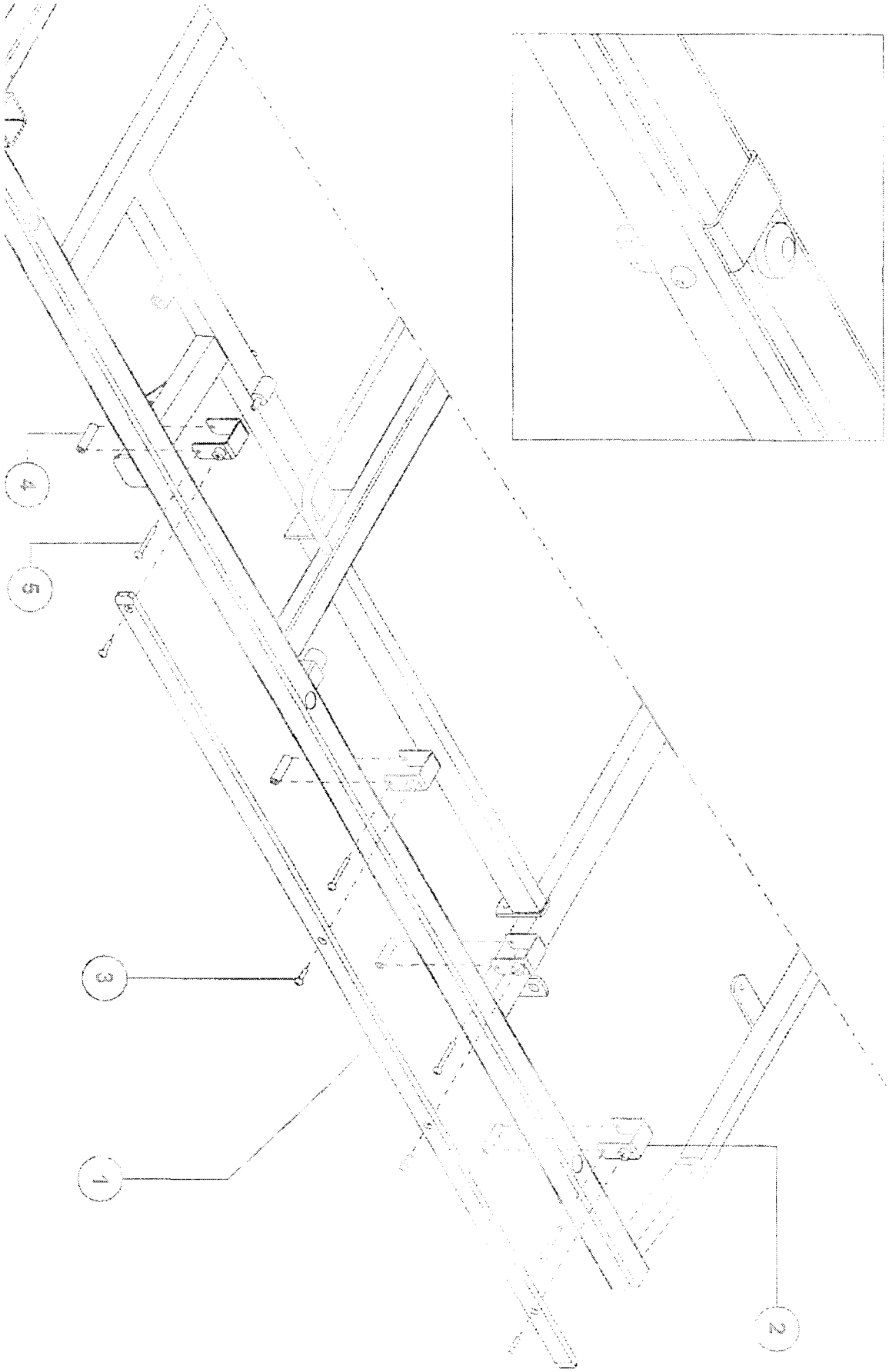
1
2
3
4
5

5.4.22 Egress bar fittings

Item	Qty.	Reference	Description
1	1	Accessory	Egress bar
2	4	S30412	Universal bushing
3	6	S10282	Nut for bushing PS
4	2	S30151	Bushing T.P.S.

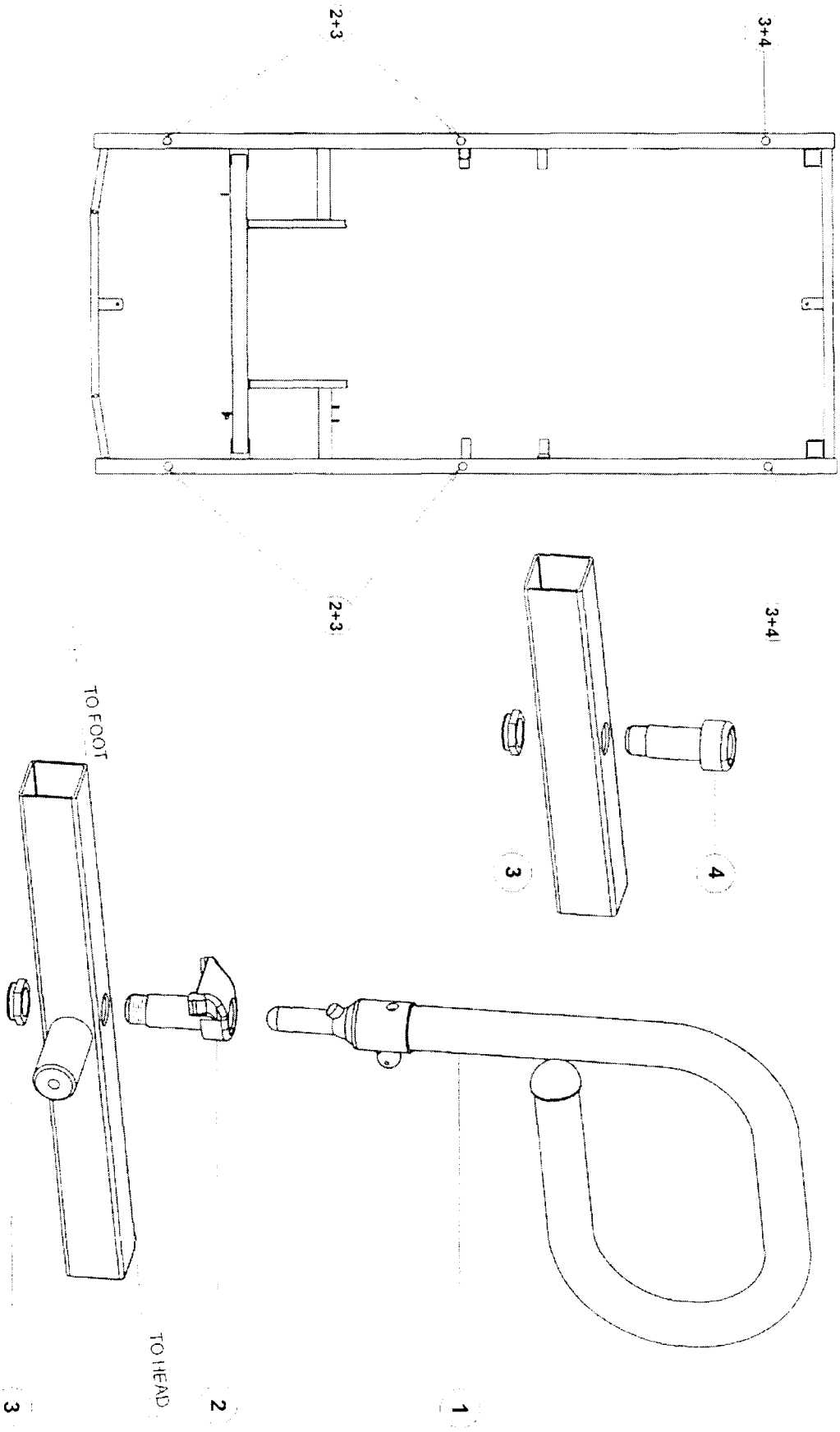
3+4
2+3
3+4
2+3
4
3
TO FOOT
1
2
TO HEAD
3

5.4.23 Sliding head section

Item	Qty.	Reference	Description
1	1	LT1540	Sliding Head Section
2	2	VI0368	Nut nylstop M10 SB ZB
3	2	VI0374	Washer 10*20 ZB
4	2	VI0242	Screw trigob CB Ø 3.5*12 ZB
5	2	S10751	Roller axle HS
6	2	VI0418	VAT N°10*13 CBL ZB
7	4	S10753	Ring Rod HS
8	1	S20713	Rod HS
9	4	S10752	Screw Rod HS
10	1	LT0562	Welded rod HS
11	2	S10750	Roller HS
12	2	S20720	Plastic rail
13	1	VE0089	Elevation cylinder-0-Mat 114
14	2	QD0028	Ring starlock Ø 8
15	1	QD1161	Label vitadresse 19 x 13 white
16	1	S10759	Stop HS
17	1	VI0093	VAT TR N° 10 x 32 ZB
18	1	QD0692	Ground strap HR 4565803
19	4	VI0186	Insert CD M8KT30 Steel

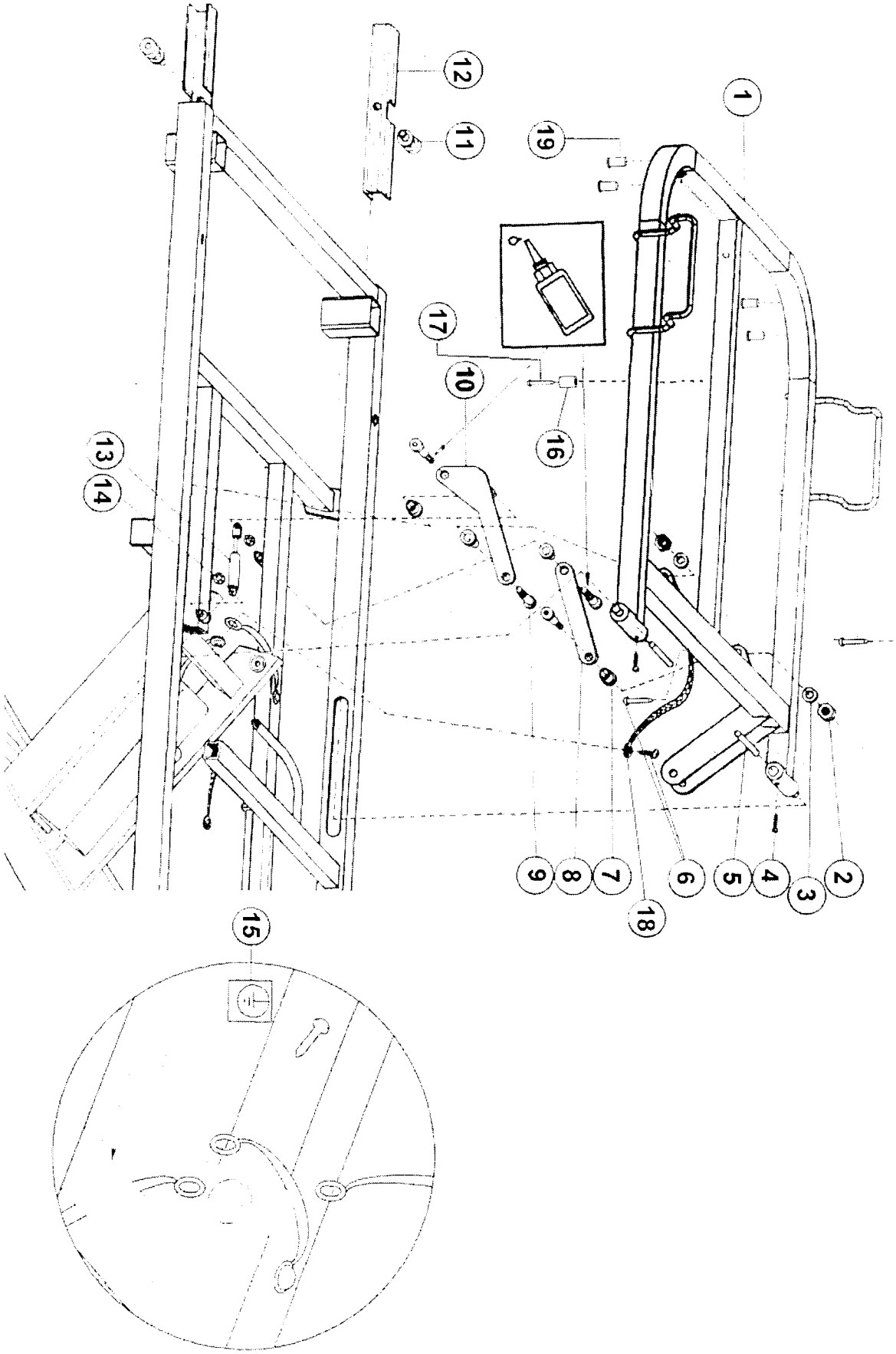
1
2
3
4
5
6
7
8
9
10
11
12
13
14
15
16
17
18
19

5.4.24 Single foot section on SHS frame

Item	Qty.	Reference	Description
1	1	LT0543	Single Foot Section (if version without T./R.T.)
or	1	LT0891	Single foot Section (if T./R.T. version)
2	2	VI0482	Screw BHC M5*42 10/12 ZB
3	2	S30338	Ball socket
4	2	VI0370	Nut nylstop SB M5 ZB
5	2	VI0485	Screw FHC/90 10*30 10/9 ZB braked
6	2	S10592	Ball socket ring
7	1	VI0418	VAT n°10*13 CBL ZB
8	2	QD0458	Free telescopic support
9	4	QD0028	Ring starlock Ø 8
10	1	S10770	Rack setting pin
11	1	VI0372	Washer prog. 8*18 ZB
12	1	VI0367	Nut nylstop M8 SB ZB
13	1	LT0855	Bed frame S.H.S.

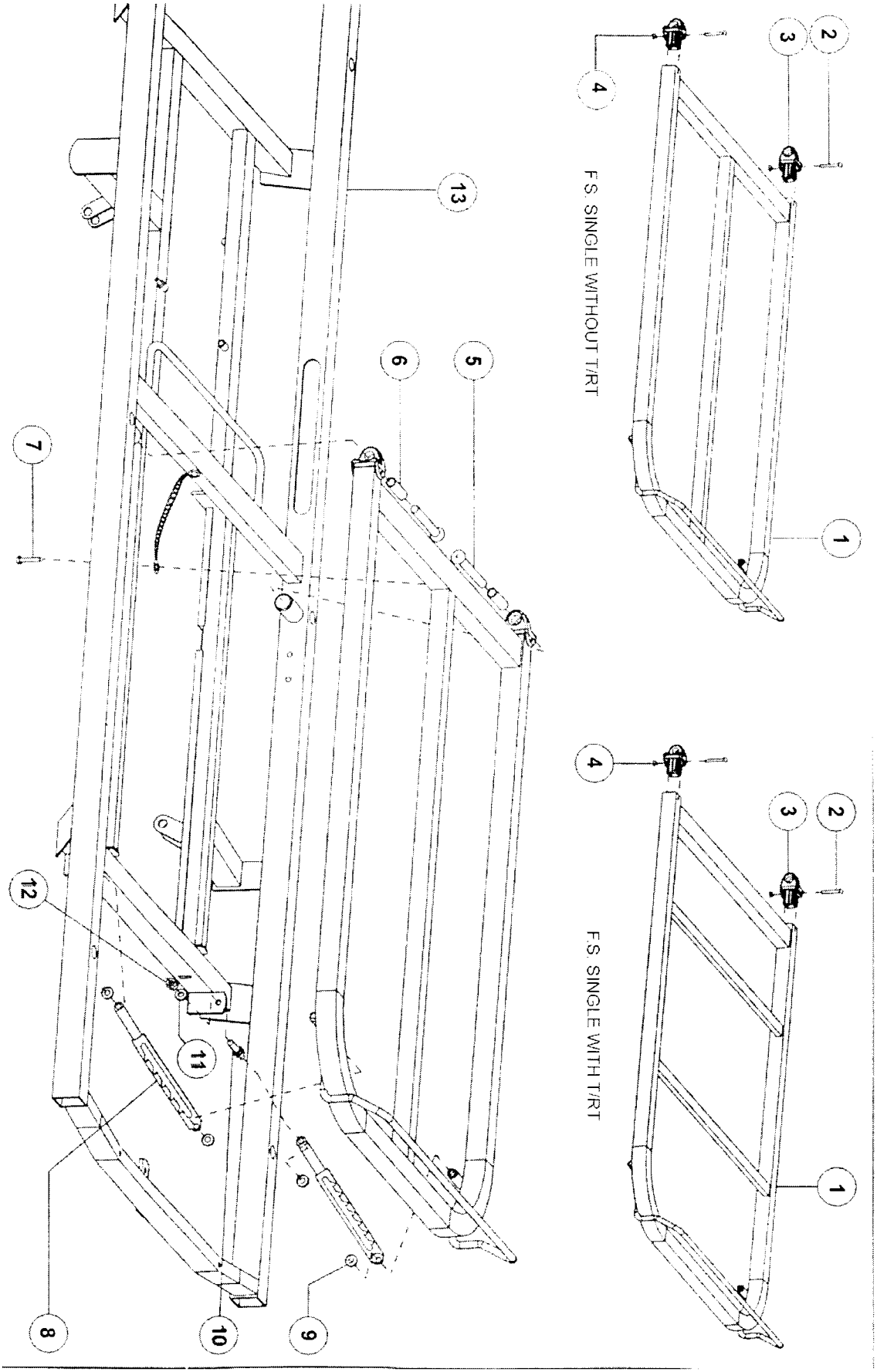
F.S. SINGLE WITHOUT T/RT
F.S. SINGLE WITH T/RT
1
2
3
4
5
6
7
8
9
10
11
12
13

5.4.25 Knee section on SHS frame

Item	Qty.	Reference	Description
1	1	LT0280	KNEE SECTION
2	1	LT0542	TIBIA SECTION
3	2	S30341	LEFT FOOT BALL SOCKET
4	6	VI0482	SCREW BHC M5*42 10/12 ZB
5	6	VI0370	NUT NYLSTOP SM M5 ZB
6	4	S30338	INSERT WITHOUT BALL SOCKET
7	2	S30129	LIGHT BEIGE STOP FOR MESH
8	2	VI0093	VAT N°10*32 TR ZB
9	1	QD0630	GROUND STRAP 11.5 A4565801
10	3	VI0418	VAT N°10*13 CBL ZB
11	4	QD0028	RING STARLOCK Ø 8
12	2	QD0458	FREE TELESCOPIC SUPPORT
13	4	S10592	RING BALL SOCKET
14	4	VI0485	SCREW FHC/90 10*30 10/9 ZB BRAKED
15	1	S10770	RACK SETTING PIN
16	1	VI0372	WASHER PROG. 8*18 ZB
17	1	VI0367	NUT NYLSTOP M8 SB ZB
18	1	LT0855	BED FRAME S.H.S.

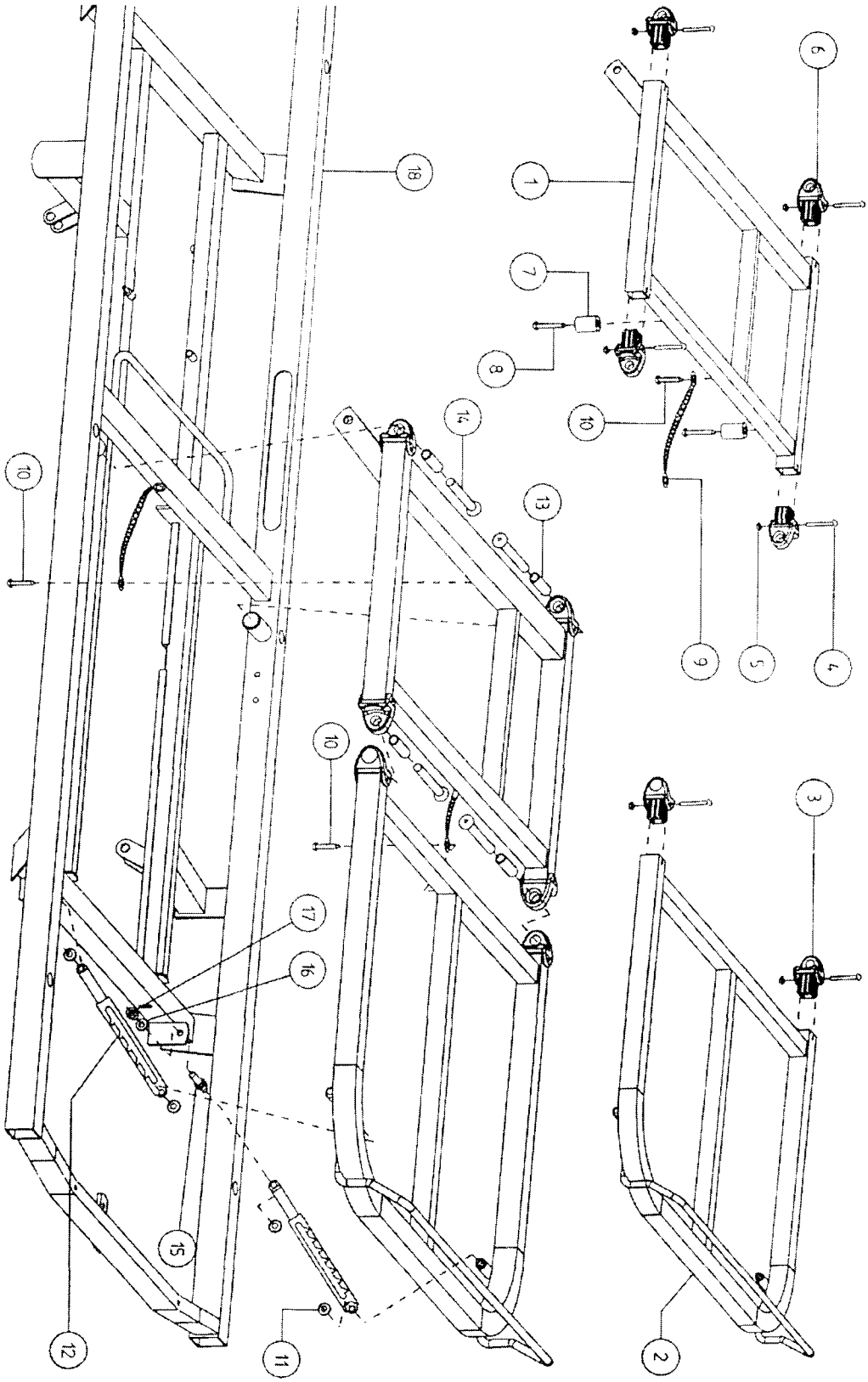
6
1
18
7
8
10
14
13
10
9
5
4
10
3
17
16
15
12
11
2

5.4.26 Hard surfaces on frame

Item	Qty.	Reference	Description
1	1	F10596	Hard surface HS
2	1	F10264	Hard surface SFS
3	1		Sleep surface frame HS + SFS
4	1		Sleep surface frame HS + KS
5	1	F10262	Knee section hard surface
6	1	F10263	Foot section hard surface

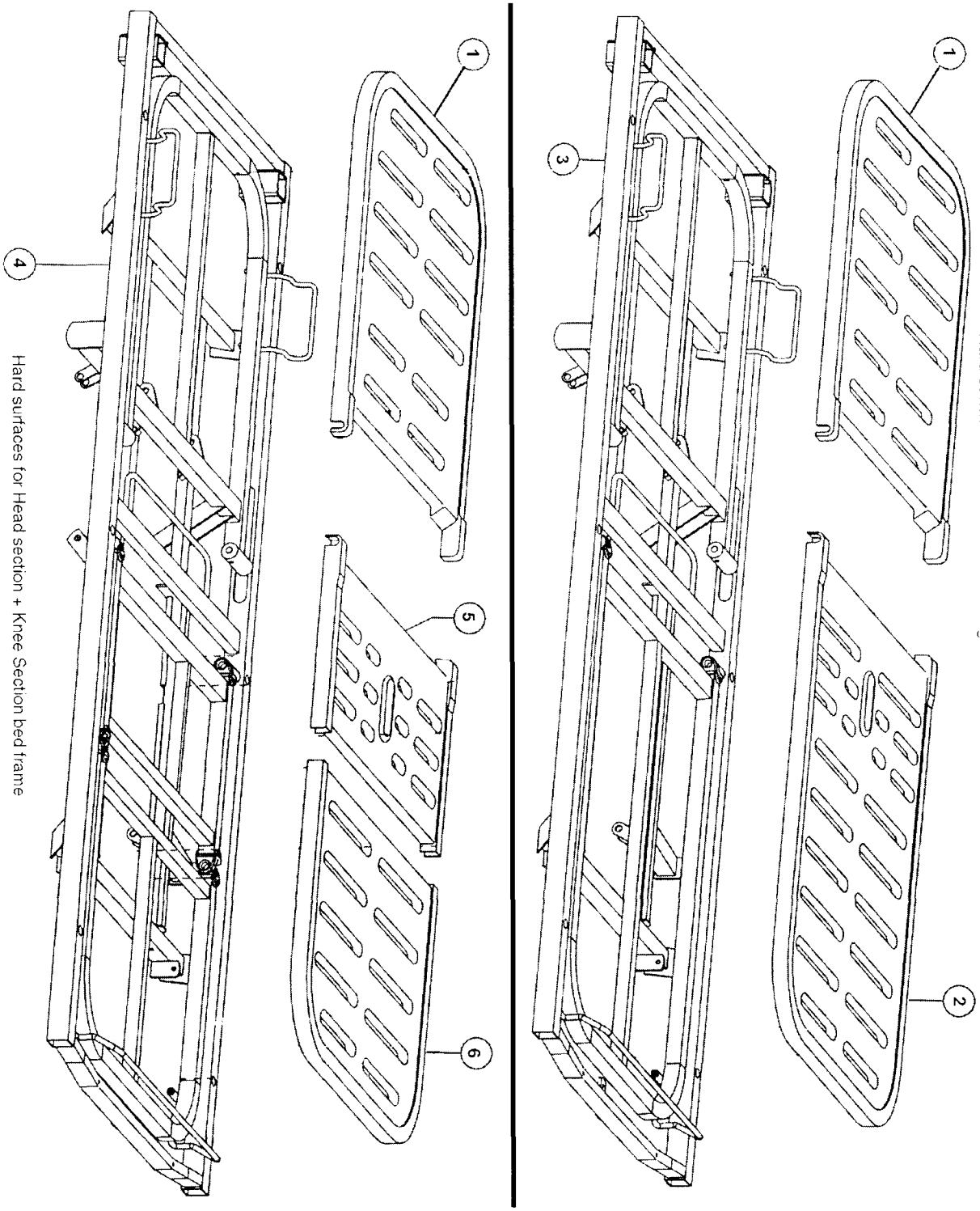
1
2
3
Hard surfaces for Head Section + single Foot Section bed frame
1
4
5
6
Hard surfaces for Head section + Knee Section bed frame

5.4.27 Flexible arm pendant

Item	Qty.	Reference	Description
1	1	QD0888	Pendant arm cable
2	1	QD0939	PVC sleeve 52 shore Ø 20*24 B Lg 880
3	1	S30397	Base
4	2	VI0426	Plastic screw T 45 CBL 4*10 ZB
5	1	QD0823	Dark beige plastic tube . Ø 10*7 lg 940
6	1	S30413	Arm ring
7	1	S20698	Anti-rotation plate
8	1	QD0836	Pendant arm keyboard
or	1	QD1014	Pendant arm keyboard HL RD
9	1	QD0941	Box "H.R." front
10	2	VI0526	Toothed washer DIN6797A D3,5
11	1	QD0970	Arm label
12	1	QD0943	Box "H.R." rear
13	2	VI0520	Screw CBL PHILLIPS N6-32x5/8
14	2	VIO521	Flat washer DIN9021 D 3,7
15	1	LT0577	Pendant arm
16	2	S10747	Threaded pin
17	2	QD0603	Adjustment knob M8*1.25
18	2	VI0526	Washer ref. 31236 I (H-R)
19	2	VI0520	Screw CBL PHILLIPS N6-32x5/8
20	2	VIO521	Flat washer DIN9021 D 3,7
21	1	QD0940	O-ring Ø 13.6*2.7 nitril
22	1	P90237	Label 3 F AD023A (if accessory)
23	1	QD1028	Thermo-lucent sleeve B80 (if accessory)

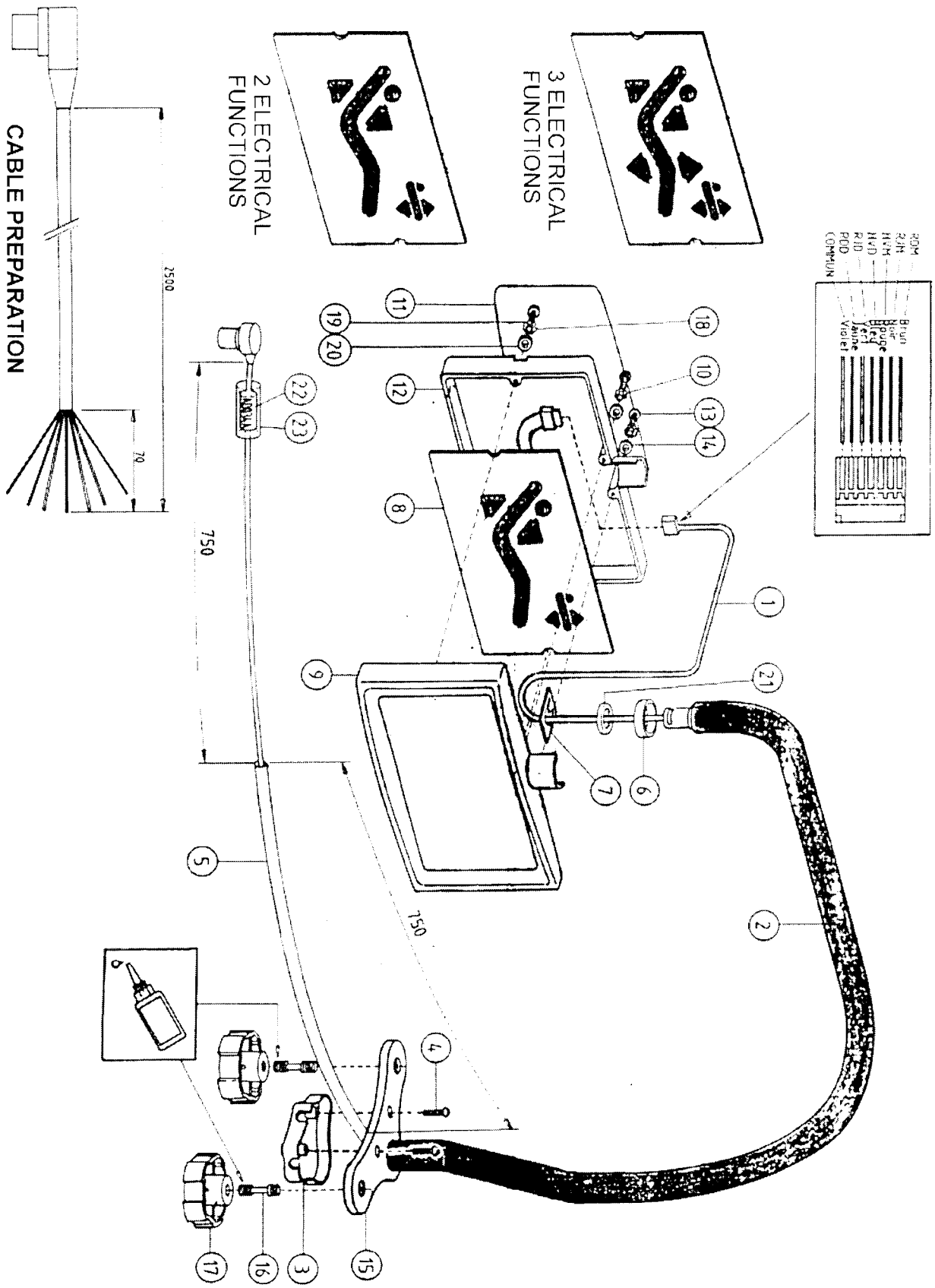
3 ELECTRICAL FUNCTIONS
2 ELECTRICAL FUNCTIONS
CABLE PREPARATION
2500
70
750
750
COMMUN
Brun
Noir
Rouge
Bleu
Vert
Jaune
Violet

5.4.28 Flexible arm on head section

Item	Qty.	Reference	Description
1	1	Page 5-56	Flexible arm pendant
2	1	Page 5-48	HS on bed frame
3	1	QD0601	Spout type L LD3WH2M-A
4	4	VI0290	VAT N° 8*32 TR ZB
5	2	S30398	Sleeve clamp

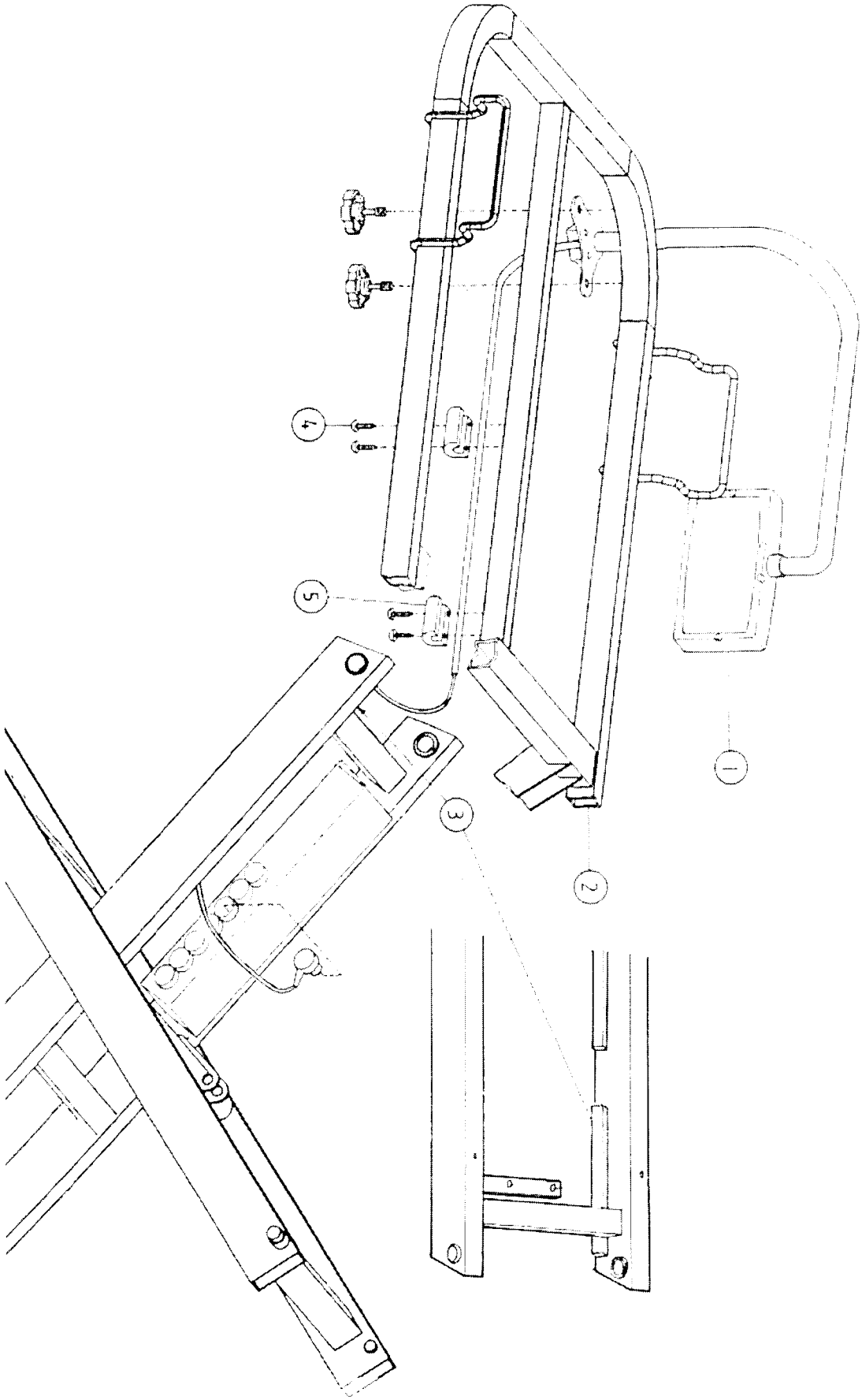
1
2
3
4
5

5.4.29 Power supply

Item	Qty.	Reference	Description
1	1	QD0630	GROUND STRAP 11,5 A4565801
2	1	QD0907	POWER UNIT + COMFORT MODE
or	1	QD0824	POWER UNIT
3	2	QD0777	CAP DEWERT (LI150Ax FS without CAP)
or	1	QD0777	CAP DEWERT (LI150Ax FSC without CAP)
4	2	QD0983	ASSEMBLY CLIP, MEGAMAT BOX
			Option Great Britain destination
5	1	QD0980	Power supply cable Dewert - G.B.
			Option Switzerland destination
6	1	QD0982	Power supply cable Dewert - Switzerland

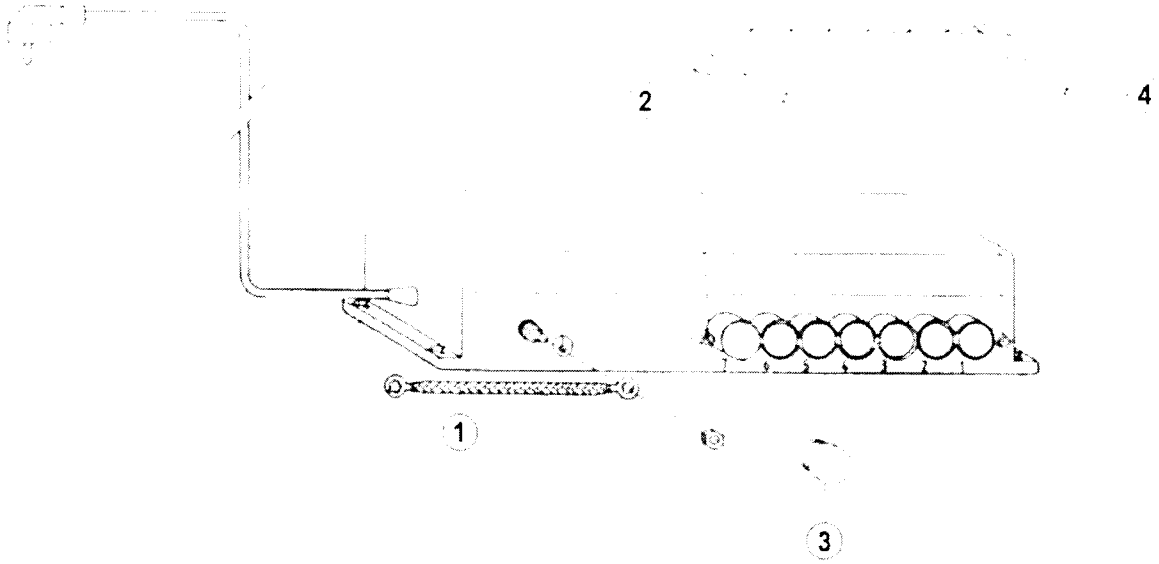
2
4
1
3

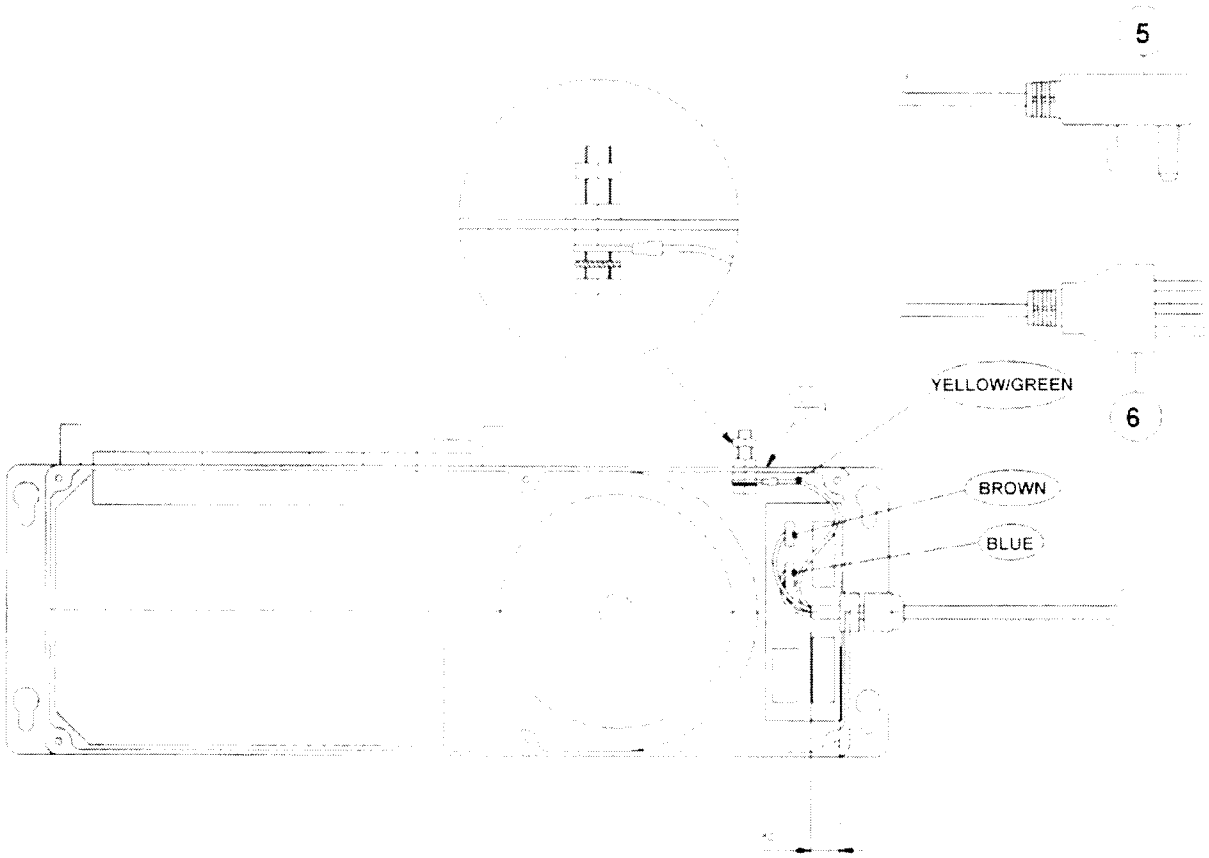
5
YELLOW/GREEN
6
BROWN
BLUE

5.4.30 Power supply on elevation arm

Item	Qty.	Reference	Description
1	1	LT0839	Elevation arm
2	1	QD0907	Comfort mode power unit
3	1	S30440	Casing
4	4	QD1186	Pin-clip D5,8
5	2	S30365	Crossbar base
6	2	S10705	Bearing axle end cap
7	2	QD0215	Bearing 6202
8	2	S30367	Motor crossbar base
9	1	QD0601	Spout type L LD3WH2M-A Lg 500
10	2	VI0464	Screw BHC M5 x 16 ZB
11	2	QD0433	Spacer 08-6-10 skiffy
12	2	VI0370	Nut nylstop SB M5 ZB

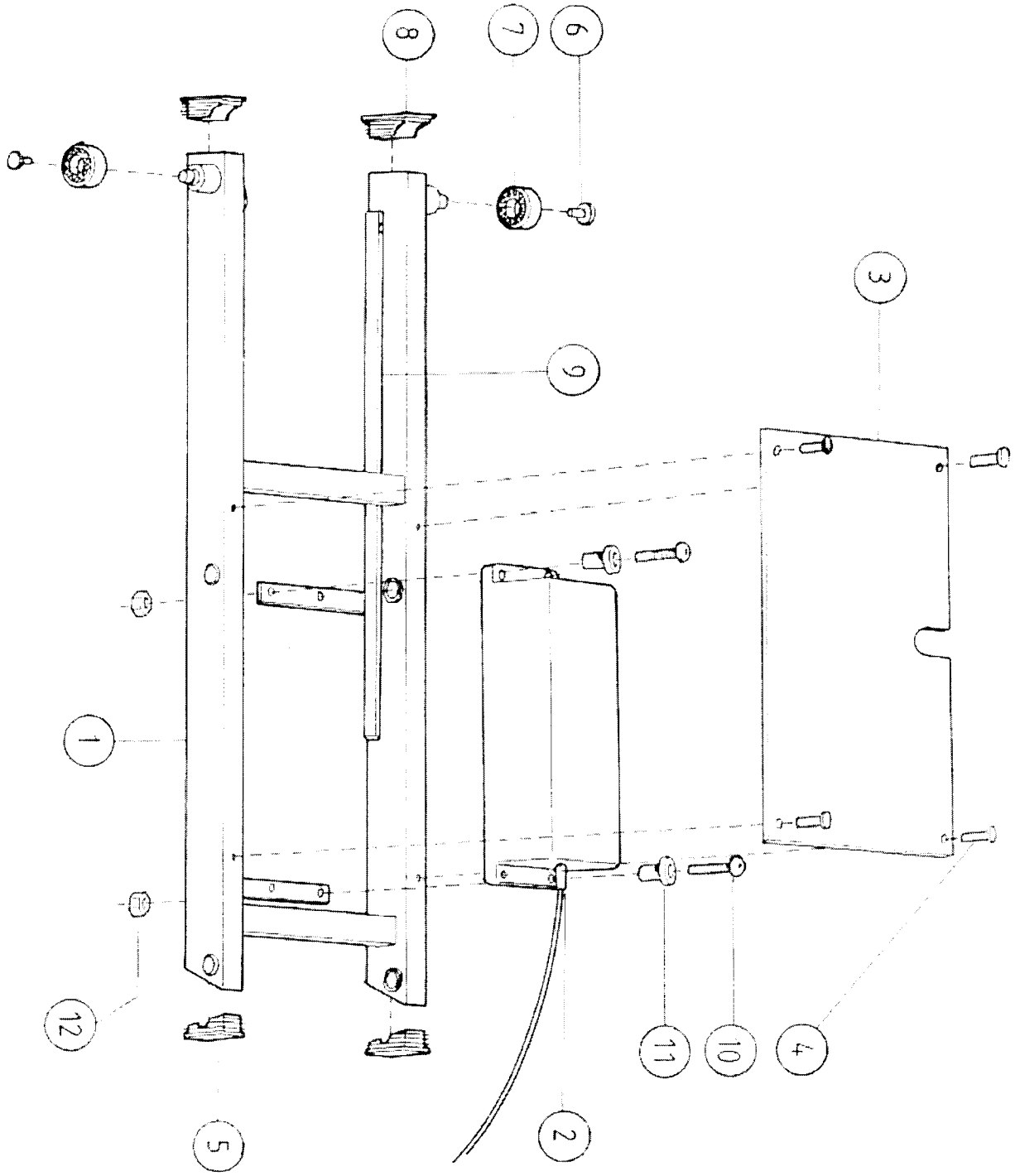
12
5
1
2
11
10
4
9
3
8
7
6

5.4.31 Lockout unit

Item	Qty.	Reference	Description
1	1	LT0855	Bed frame HS
2	4	VI0418	VAT N°10*13 VCBL ZB
4	1	QD0591	Spout white LD5WH2M-A Length 100
5	1	QD0829	Power unit HL RD FSC Dewert
6	1	QD0692	Ground strap HR 4565803
7	1	QD0630	Ground strap 11.5 A4565801
8	12	QD1060	Stop cap Ø 11.1 white (if 148 PC00)
or	6	QD1060	Stop cap Ø 11.1 white (if 147D1 PC00)
9	2	QD1047	Insert M8 flange clearing (if 148)
or	8	QD1047	Insert M8 flange cleanng (if 147D1)
10	1	QD0055	Clamp SES 85/22 M
11	1	QD0591	Spout white LD5WH2M-A Length 250
12	1	QD0808	CLAMP SES 380/47 SL HT-C NAT
13	1	S20717	Function lockout bent plate
14	2	VI0478	Screw trigob CB Ø 4*8 ZB
15	1	QD0909	Function lockout box holding
			Basic version
16	1	QD0905	2-function lockout unit
			Foot Section Crank option
17	1	QD0831	3-function lockout unit

5

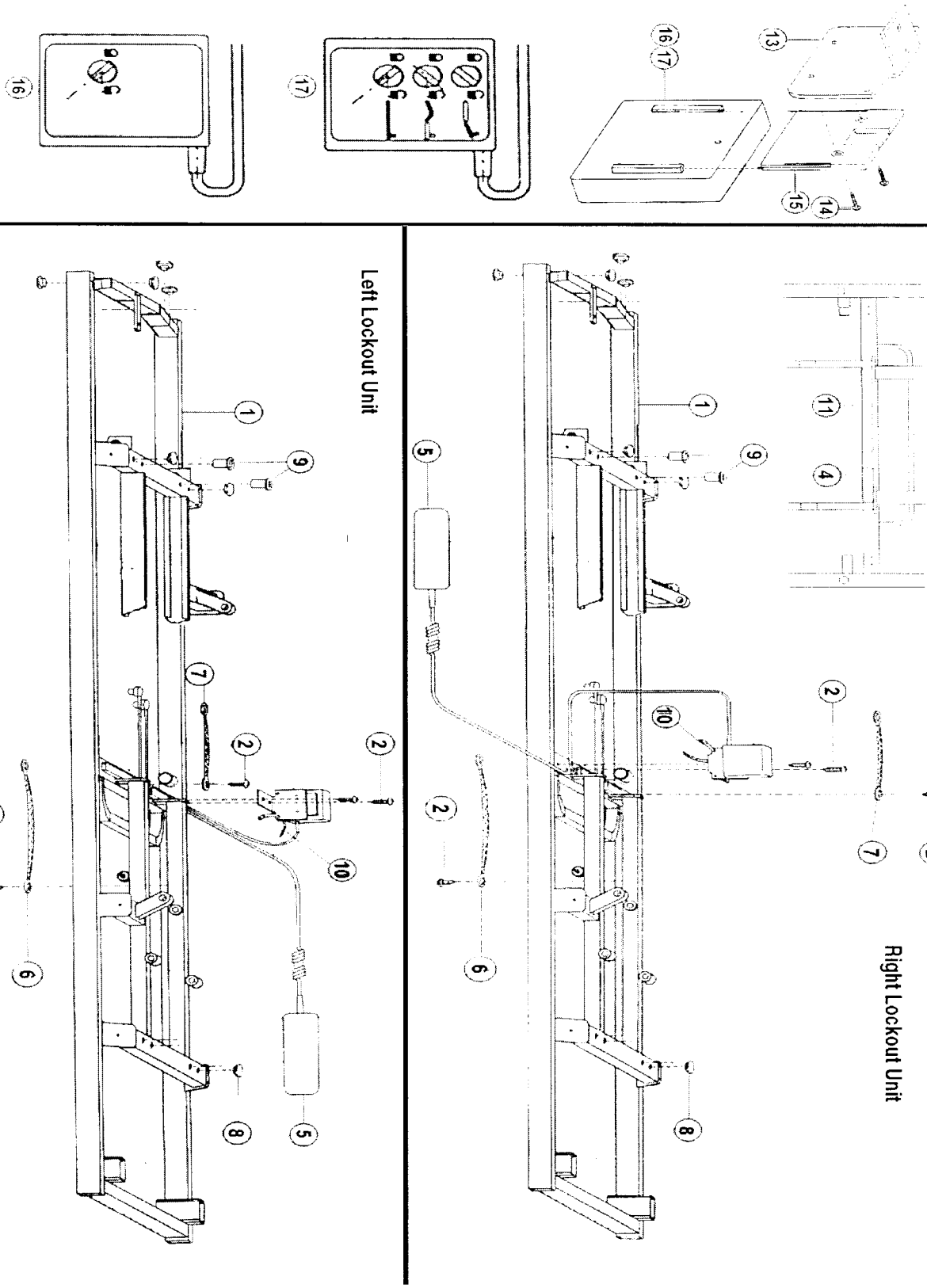
Right Lockout Unit
Left Lockout Unit

5.4.32 2-Side pedal

Item	Qty.	Reference	Description
1	1	QD0889	Side electrical HL Pedal cable
2	1	S30399	Support switch
3	2	QD0913	Switch 83 186 O W2S Crouzet
4	4	VI0513	Screw for plastic 22*12 TR ZB
5	5	QD0914	Thermo. sleeve SES B-EX240/1
6	1	LT0831	Electrical side pedal
7	4	S30404	Tampography pedal top
8	4	S10653	Pedal washer
9	4	VI0419	Screw BHC M6*16 ZB
12	2	S30439	Single brake block
13	1	P90236	Label AD022A (if accessory)
14	1	QD1028	Transparent thermo sleeve B80 (if accessory)

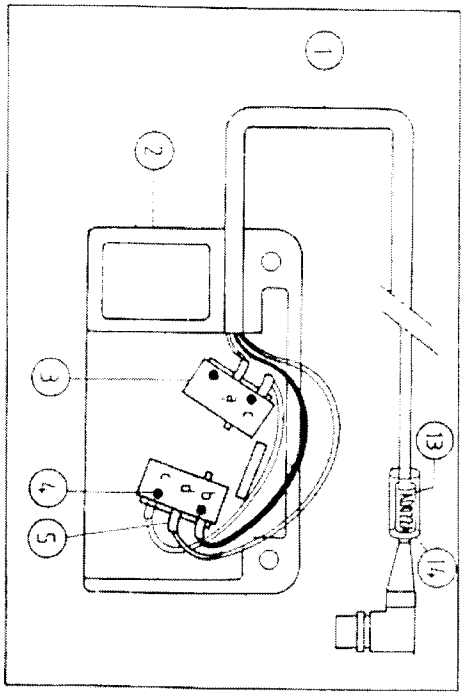

VERSION 147

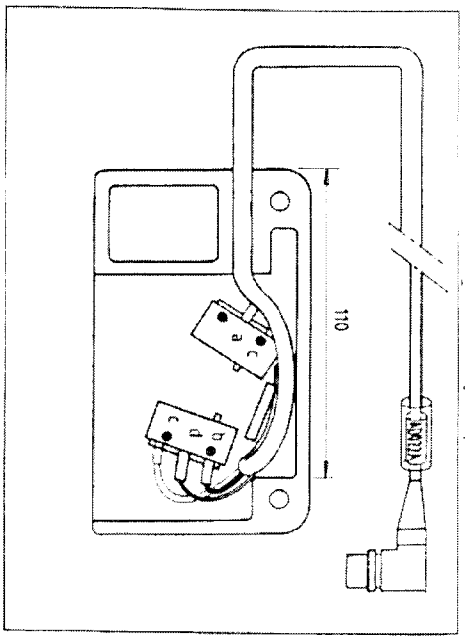

VERSION 146/148/150

Cable assembly as per 147

	Color	Lg	
a	Yellow	30	HL Down
b	Black	90	Common
c	Yellow	90	Common
d	Red	90	HL Up

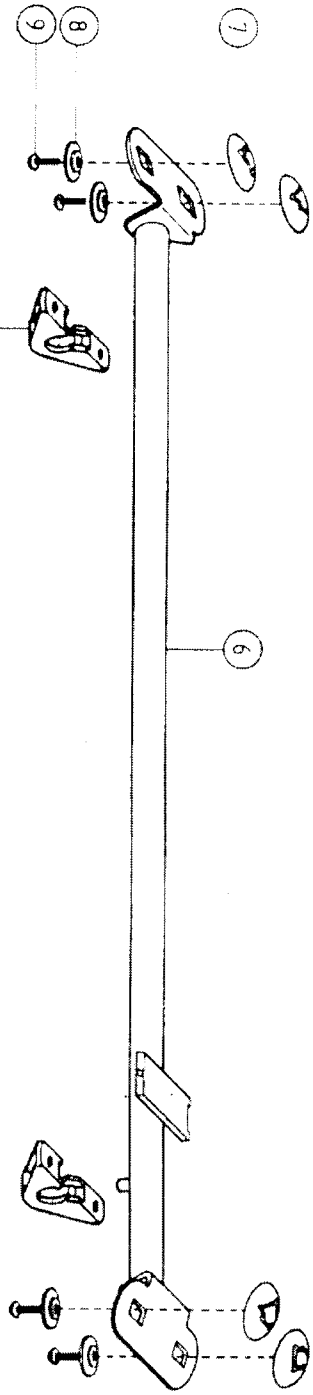

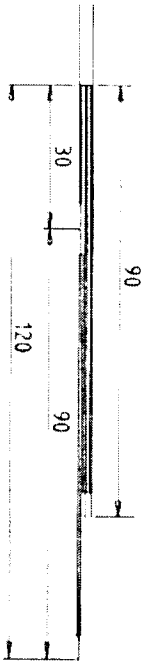

CABLE PREPARATION

5.4.33 2-side pedal on frame

Item	Qty.	Reference	Description
1	1	Page 5-4	Base + elevation without cover
or	1	Page 5-6	Base + elevation with cover
or	1	Page 5-8	Base + elevation T./R.T. without cover
or	1	Page 5-10	Base + elevation T./R.T. with cover
2	1	QD0601	Spout type L LD3WH2M-A length 315
3	1	Page 5-66	Side pedal + support switch
4	1	S20701	Cylinder spring
5	1	S10748	Cylinder
6	2	VI0290	VAT N°8*32 TR ZB
7	4	VI0514	VAT N°14*19 TR pozid ZB
8	1	S20702	Lame switch
9	1	VI0419	Screw BHC M6x16 ZB
10	1	VI0217	Toothed washer D:6x11 ZB

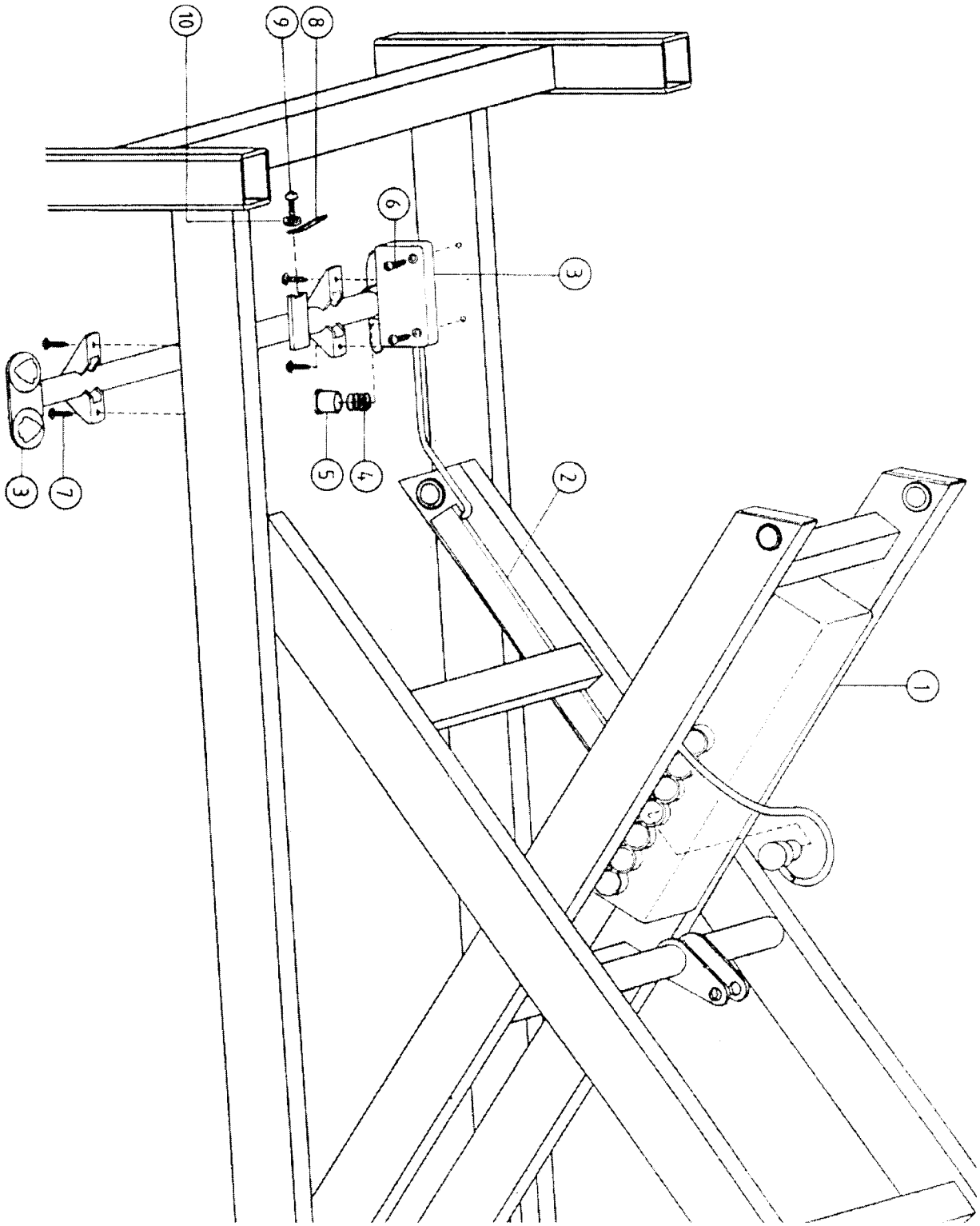
10
9
8
6
3
3
7
5
4
2
1

5.4.34 Knee section motor assembly

Item	Qty.	Reference	Description
1	1	VE0096	KNEE SECTION DEWERT MOTOR
2	4	QD0527	TRUARC 12 SPRINGFIX RING
3	2	S10568	MOTOR ATTACHING SHAFT

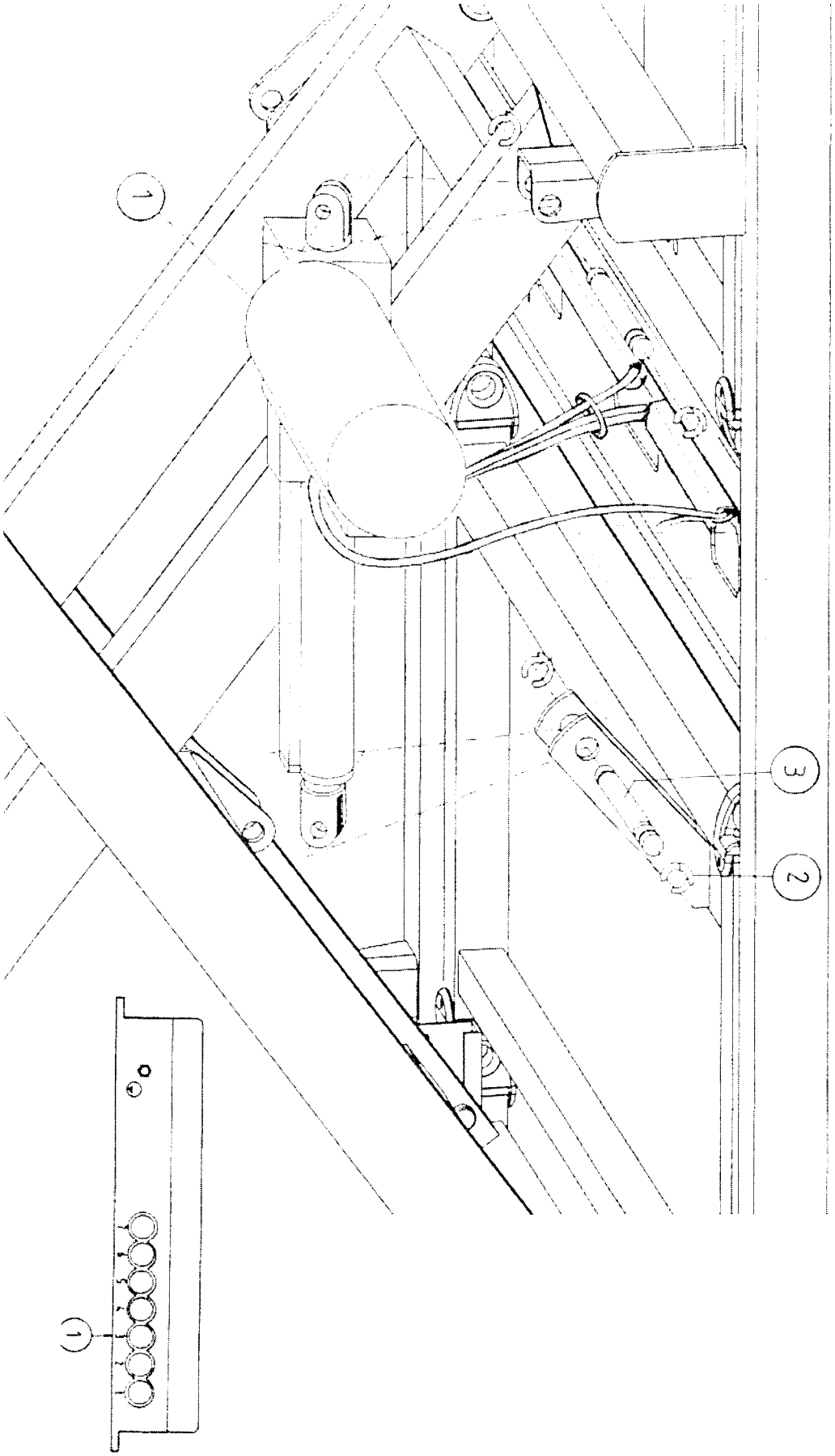
1
3
2
1

5.4.35 Ø: 32 round tube headboard

Item	Qty.	Reference	Description
1	1	LT0202	HEADBOARD Ø 32
2	2	QD0414	DECORATOR STARLOCK Ø 8 STAINLESS STEEL
3	2	S30099	LIGHT BEIGE BOARD STOP
4	2	S10187	SPACER
5	2	VI0347	SCREW FHC/90 M6*12 ZB
6	1	P10961	LAMINATED HEADBOARD 8 mm
7	2	S30201A	LIGHT BEIGE LEFT BOARD CLIP
8	2	S30218A	LIGHT BEIGE RIGHT BOARD CLIP
9	4	VI0354	SCREW FOR METAL SHEET TF 8*13 Z.B

Note: It is required to indicate the color code of the laminated part when replacing a board.

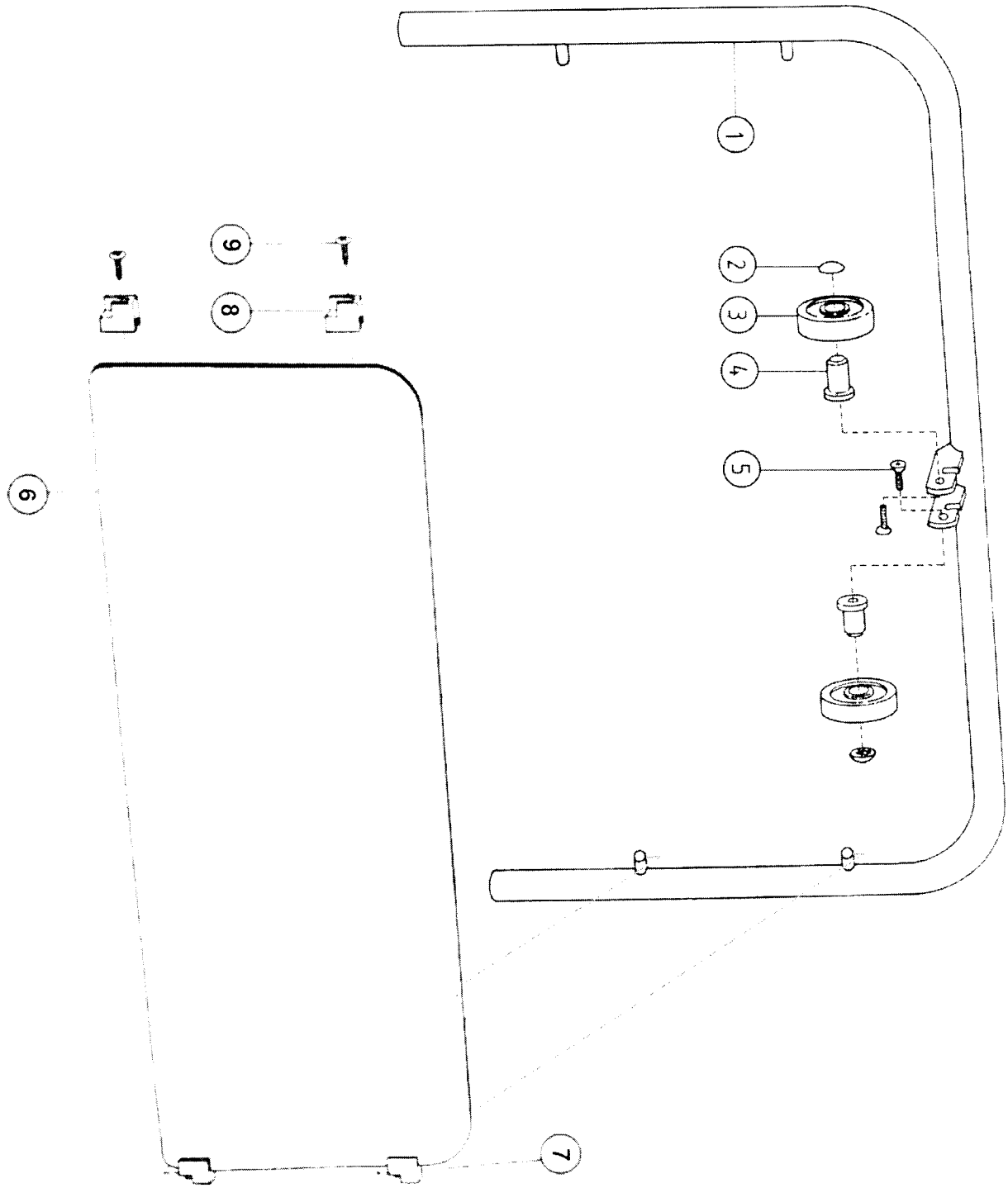
1
2
3
4
5
6
7
8
9

5.4.36 Ø: 32 round tube footboard

Item	Qty.	Reference	Description
1	1	LT0204	ROUND TUBE FOOTBOARD D32
2	1	P10930	LAMINATED FOOTBOARD 8 mm
3	2	S30201A	LIGHT BEIGE LEFT BOARD CLIP
4	2	S30218A	LIGHT BEIGE RIGHT BOARD CLIP
5	4	VI0354	SCREW FOR METAL SHEET TF 8*13 Z.B

Note: It is required to indicate the color code of the laminated part when replacing a board.

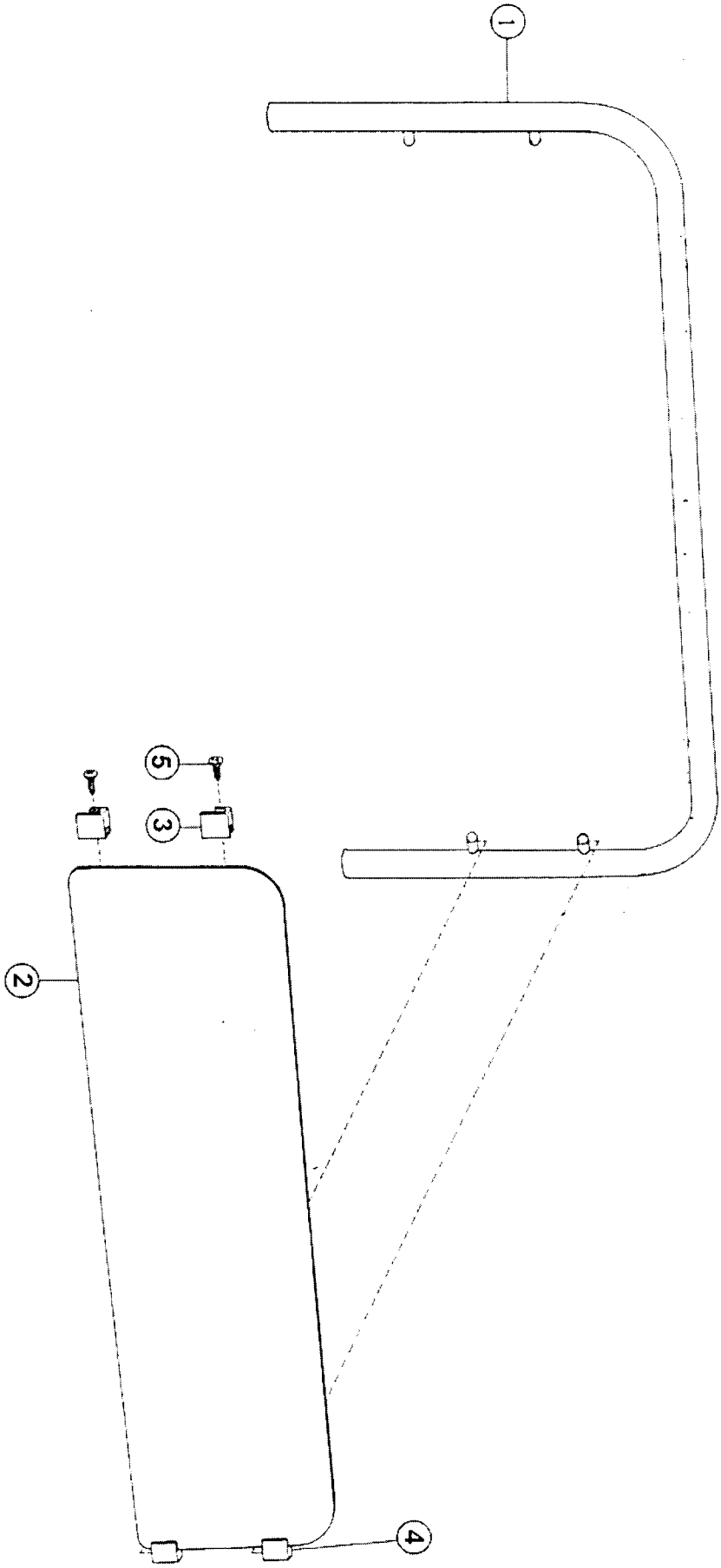
1
2
3
4
5

5.4.37 Mediform board

Item	Qty.	Reference	Description
1	1	DL175T	LI150Ax MEDIFORM BOARD

Note: It is required to indicate the color code of the laminated part when replacing a board.

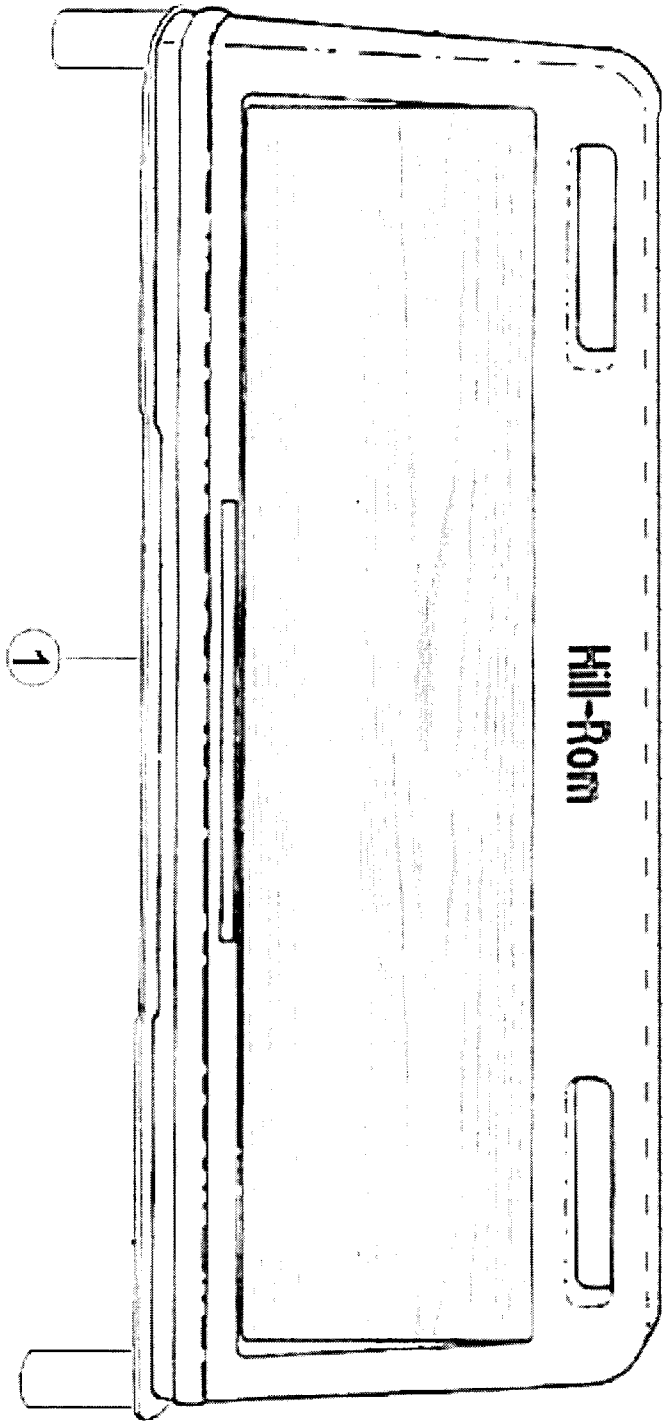
Hill-Rom
1

5.4.38 Sliding head section

Item	Qty.	Reference	Description
1	1	LT0206	ARCHED SLIDING BOARD
2	4	VI0463	SCREW BHC M6*20 Z.B.
3	4	VI0371	WASHER 6*12 Z.B.
4	2	VI0337	SCREW FHC / 90 M8*20 10/9 Z.B.
5	2	S30336	STOP Ø 100
6	1	LT0205	SLIDING BOARD FRAME
7	2	S30301	RAIL Ø 16
8	4	VI0360	NUT H M6 Z.B.
9	1	LT0207	SLIDING BOARD SLIDER
10	2	VI0373	WASHER 8*16 EP.1.5 Z.B.
11	2	VI0326	SCREW H M8*16 Z.B.
12	1	S10550	RATCHET
13	1	QD0402	PIN 4*30 STAINLESS STEEL MECANINDUS
14	1	S20507	SPRING Ø 19 EP.1.3 L.32
15	1	S30302	RATCHET RING
16	1	S30303	RELEASE BUTTON
17	2	S20318	CAM SUPPORT WASHER
18	2	S10640	SLIDING BOARD RING
19	1	QD0576	TRUARC RING Ø 16
20	1	F10120	SLIDING BOARD PANEL 8mm
21	2	S30201A	LIGHT BEIGE LEFT BOARD CLIP
22	2	S30218A	LIGHT BEIGE RIGHT BOARD CLIP
23	4	VI0354	SCREW FOR METAL SHEET TF 8*13 Z.B

Note: It is required to indicate the color code of the laminated part when replacing a board.

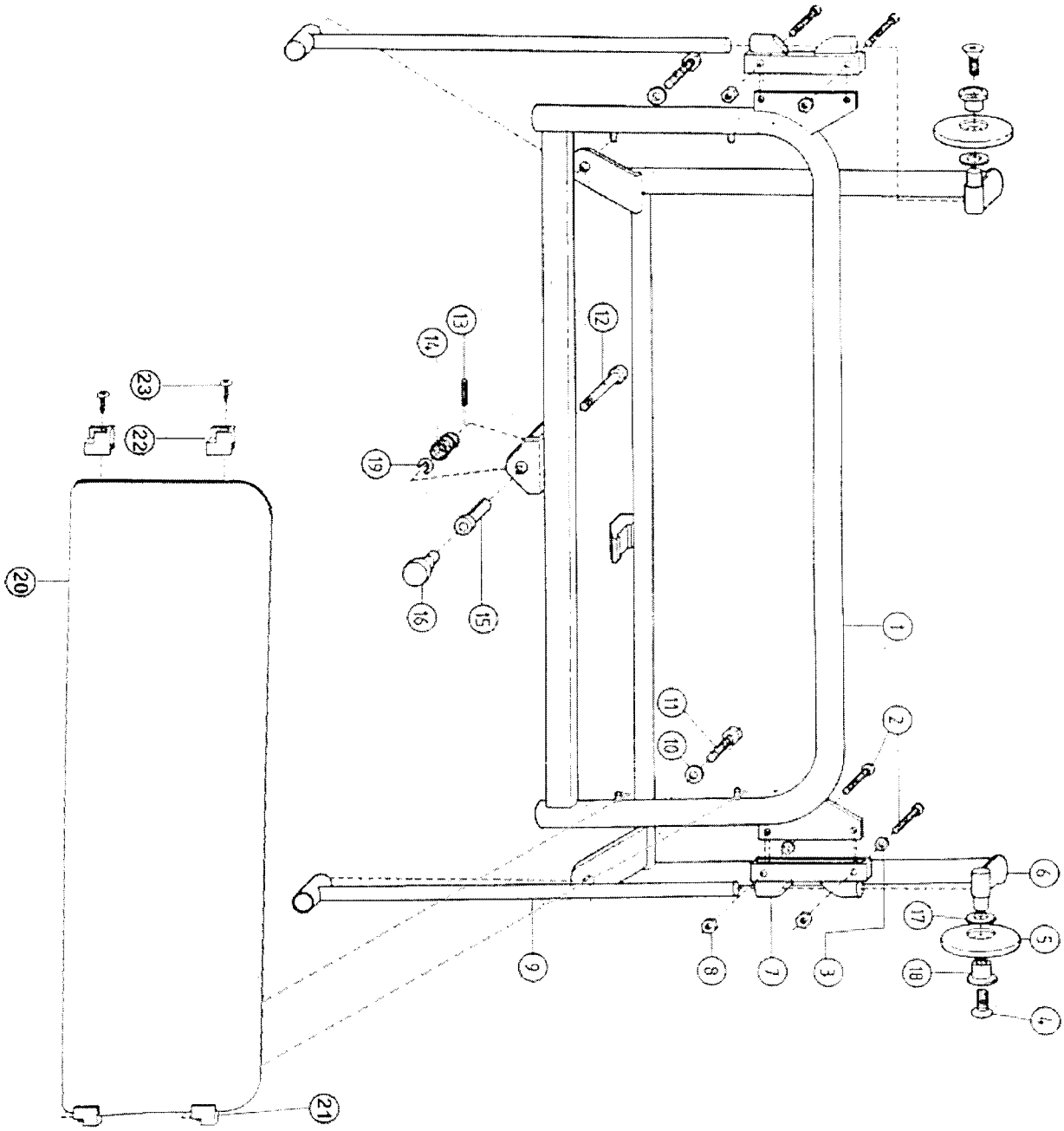
1
2
3
4
5
6
7
8
9
10
11
12
13
14
15
16
17
18
19
20
21
22
23

5.4.39 Monitor holder

Item	Qty.	Reference	Description
1	2	P90141	Monitor holder
2	1	QD0783	LL sideview isogain L.1360
3	1	QD0782	LL sideview isogain L. 620
4	1	AC0211	Monitor holder frame
5	2	QD1220	Pin G5 8*30
6	1	AC0221	Monitor holder arched epoxy
7	1	Page 1-13	Label Maximum load. 25 Kg
8		CO0871	Glue AGOMET F347 HI

Note: For the laminated panel, refer to Foot Section Ø: 32 (identical).

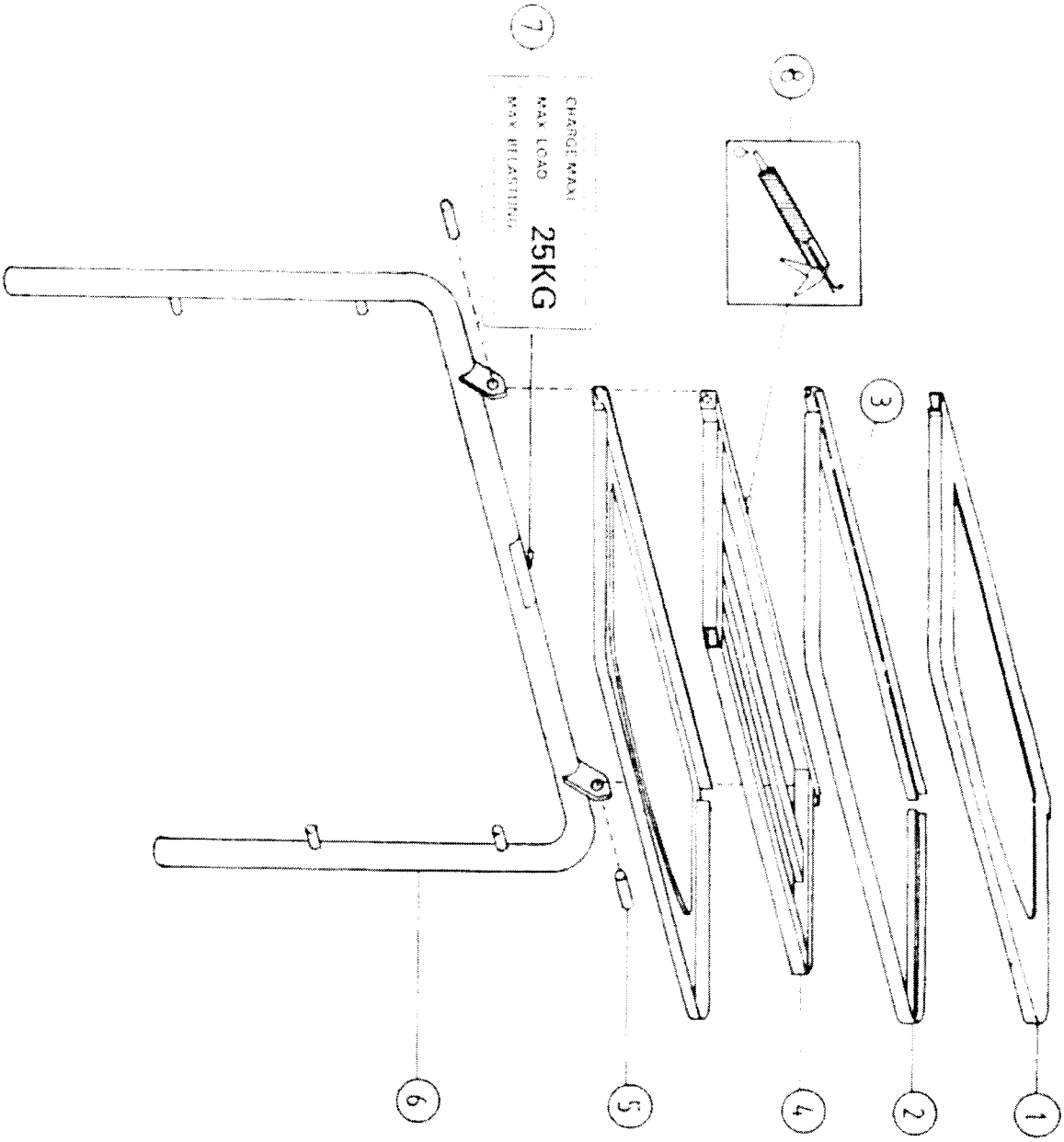
1
2
3
4
5
6
7
8
CHARGE MAX
MAX LOAD
25KG

Notes :

5

6. General procedures

Section Contents

Cleaning and Care 6-2
- Overall cleaning 6-2
- Spray washing 6-2
- Hard to clean spots 6-2
- Disinfection 6-2
- Lubrication requirements 6-2

Preventive Maintenance 6-2
- Preventive Maintenance Schedule 6-3
- Preventive maintenance checklist 6-5

Tool and Supply Requirements 6-6

Cleaning and Care

WARNING:

Unplug the bed before cleaning and care. Refer to the "LI150Ax User Manual" and the specific chapters of this manual for further precaution.

Overall cleaning

Wipe the bed using a slightly damp cloth and standard disinfectants. Do not use too much liquid on the parts to cleaned.

Spray washing

Do not use spray washing equipment on the LI150Ax bed. Excessive humidity can damage the mechanisms and components of the bed..

Hard to clean spots

Use standard household cleaners and/or a soft bristle brush to remove troublesome spots or stains. Heavy dried soil and excreta may first require soaking to loosen.

CAUTION:

Do not use cleaners, solvents or detergents of high concentration.

Disinfection

Dilute disinfectants and/or germicides as indicated on the manufacturer's label.

Lubrication requirements

The LI150Ax bed does not require periodic lubrication.

Preventive Maintenance

The 150Ax bed must have an effective maintenance program. This will help to ensure a long and productive life for the LI150Ax bed and will help minimize downtime due to excessive wear failures.

A yearly inspection is recommended to maintain the bed in good operating condition.

Every 3 years on average, specialized after-sales personnel should inspect all electrical functions, in order to increase the life cycle performance.

The preventive maintenance schedule that follows is intended to guide the technician through a normal preventive maintenance procedure on the LI150Ax bed. Check each item on the schedule, and make any necessary adjustments during the preventive maintenance process.

The preventive maintenance schedule is intended to be used in conjunction with the preventive maintenance checklist following it. This checklist is designed to keep a running history of maintenance and subsequent repair costs for one individual LI150Ax bed. However, the facility can modify this checklist or invent another to fit their needs. Keeping close records and maintaining the LI150Ax bed and its accessories are two good ways of reducing downtime and at the same time, keeping the nursing staff happy and efficient.

Preventive Maintenance Schedule

Before starting the checks. remove the hard surfaces from the bed.

During checks. refer to the disassembly, reassembly and adjustment procedures in chapter 4 if necessary.

Put a check label on each bed after it has been checked.

Function	Procedure
Overall appearance	Check the general appearance of the bed. Touch up the paint where necessary. Observe the bed symmetry and check that the bed frame and the base are not bent. Make sure that the labels are attached and replace them if necessary.
Head and Foot boards	Check the appearance, the mounting and safety of the Head and Foot boards. Replace if necessary.
Power cable	Inspect the Power cable and plug for cuts, nicks. or breaks. Replace if necessary.
Resistance to earth	Measure the resistance to earth between a stripped section of metal and (the inside of an IV ROD base or egress bar for example) on the bed frame or the base and the ground connector of the main supply cord. Perform the same test from the equipotential terminal. The resistance must be less than à 0,2 ohms.
Hilow motor	Check motor mounting. Replace any damaged or missing parts. Carry out a complete raising/lowering cycle of the bed to check the motor operation Beds with Trend/reverse Trend: press the limit switch located on the base frame while lowering and check that the motor stops Replace the motor if unusual noise.
Head Section motor	Check the motor mounting by carrying out a complete raising/lowering cycle of the bed to the corresponding section. Hold the motor during the lowering procedure to check the free-wheel function. It must then run idle without particular strain. Replace if unusual noise.
Knee Section motor (optional, according to configuration)	Check the motor mounting by carrying out a complete raise/lower cycle of the corresponding section of the bed. Replace if unusual noise.
Auto-contour (optional, according to configuration)	Check that the Knee Section inclines up to an angle of 18° when the Head Section raising" function is selected.
Lockout switches	Test the switches individually to check that that they operate correctly. Replace if necessary.
Hand pendant	Test all hand pendant buttons by checking that they activate the appropriate function. Make sure operation is not intermittent. Replace if necessary.
Flexible arm pendant (optional)	Inspect the flexible arm mounting. Replace any damaged or missing parts. Test all flexible arm buttons by checking that they activate the appropriate function. Make sure their operation is not intermittent. Replace if necessary.

Function	Procedure
Hi-Low pedal (option)	Inspect the pedal mounting. Replace any damaged or missing parts. Test all pedal controls by checking that they activate the appropriate function. Make sure their functioning is not intermittent. Replace if necessary.
Siderail structure (accessories)	Inspect the side-rail mounting. Replace any damaged or missing parts. Test siderail operation, making sure that they lock securely in high position. Pull on them to check locking. Check that they are not bent or de-soldered.
CPR Release	Test the CPR Release functioning on each side of the bed and make sure the mechanism locks automatically. The Head Section must raise as soon as the CPR handle is released if the corresponding raising control is activated. Replace the drive cable or the motor if necessary.
Mechanical Foot Section or standard Foot Section	Test the operation of the two lockout mechanisms (racks) of the standard Foot Section (according to configuration) or of the mechanical Foot section on each side of the bed. Make sure that the racks lock in the six positions and that they release correctly. (see operating manual). Replace if necessary.
Pivot points and mobile sections	Check that there is no noise around the bed pivot points. Slightly lubricate or replace the bearings or self-lubricating rings if necessary. Lubricate the siderails (roller guides) of the base frame and bed frame.
Trendelenburg/Reverse Trendelenburg (optional, according to configuration)	Inspect the Trendelenburg / Reverse Trendelenburg mechanism assembly. Check that no circlip or pin is missing. Replace if necessary. Trendelenburg: put the bed frame in Trendelenburg, then put it back into horizontal position. Reverse Trendelenburg: put bed frame in Reverse Trendelenburg then put it back into horizontal position. Slight strain is normal and should be observed when there is no patient on the bed. These operations should be carried out without excessive effort or unusual noise. Adjust or replace the cable or the gas cylinder aids if necessary.
Bed extender (optional, according to configuration)	Check that the extender moves and locks correctly in the retracted, middle and maximum extended positions. Replace if necessary. Slightly lubricate the extender guiding rail with a standard lubricant.
Casters	Check the bearings for slits, wear, tread life, etc.Replace if necessary.
Braking and steering	Check braking by pressing the brake pedal and check whether the bed moves. Adjust if necessary. Check the steering activation. Replace or adjust the steering caster activation items if necessary. Replace the wheel if necessary.
Administration tasks	Complete all required administration tasks.

Table 6-1. Preventive maintenance schedule

Preventive maintenance checklist

Date																							Function
Hill-Rom Le Couviour	Manufacturer:																						Overall appearance
																							Head and Foot boards
																							Power cable
																							Resistance to earth
																							HI-Low motor
																							Head Section motor
																							Knee Section motor
																							Auto-contour
	Model number																						Lockout switches
																							Hand pendant
																							Flexible arm pendant
																							Hi-Low pedal
																							Siderail structure
																							CPR Release
																							Mechanical Foot Section
																							Pivot points
	Serial number																						Reverse Trendelenburg/Trendelenburg
																							Bed extender
																							Casters
																							Braking and steering
																							Administration tasks
page :	Overall cost for this																						Labor time:
																							Repair cost:
																							Checked by:
																							Notes L=Lubrification C=Cleaning A=Adjustment R=Repair/ Replacement O=Okay N=Not applicable Comments

Tool and Supply Requirements

The LI150Ax bed does not require any specific tools or supplies.

Notes :

6

7. Accessories

Section Contents

7.1 Summary List 7-2

7.2 Accessory details. 7-3

7.2.1 Siderails 7-3

7.2.1.1 Siderails "AC996E - AC996C" 7-3

7.2.1.2 Siderail "AD070C" 7-4

7.2.2 Poles 7-4

7.2.2.1 Fixed Angle Poles "AC954E - AC954C" 7-4

7.2.2.2 Fixed Angle Pole AD077C 7-4

7.2.2.3 Pivoting Angle Pole "AD024E - AD024C" 7-4

7.2.2.4 Pivoting Angle Pole AD043C 7-4

7.2.2.5 Central Poles AD078C and AC911A 7-4

7.2.3 Egress Bar AD021A 7-5

7.2.4 Two fittings kit for the egress bar (AD020B) 7-5

7.2.5 Flexible arm pendant Kit AD023A (3 electrical functions) and AD034A (2 electrical functions) 7-6

7.2.6 Linen holder kit (AD026A) 7-7

7.2.7 Monitor Holder (AC997A) 7-7

7.2.8 Equipotential cable link (AC968A) 7-7

7.2.9 IV Rod AC941A 7-7

7.2.10 Head End Basket AC937A 7-8

7.2.11 Bottle Holder AC944A 7-8

7.2.12 Control box Holder AC955A 7-8

7.2.13 Crutch Holder on Chrome Plated Board AD072A 7-8

7.2.14 Serum Bottle Holder on Pole AC953A 7-8

7.1 Summary List

Reference	Description
AC996C	Chrome plated siderails
AC996E	Epoxy siderails
AD070C	Chrome plated siderails for accessory holder bar AD071A (optional, according to configuration) or protection siderails
AC954C	Chrome plated angle pole
AC954E	Epoxy angle pole
AD077C	Chrome plated fixed angle pole with hooks
AD024C	Chrome plated pivoting angle pole
AD024E	Epoxy pivoting angle pole
AD043C	Chrome plated pivoting angle pole with hooks
AD078C	Chrome plated fixed angle pole with hooks
AC911A	Chrome plated fixed central pole
AD021A	Egress bar
AD020B	Kit 2 fitting for Egress bar
AD023A	Kit flexible arm pendant 3 electrical functions
AD034A	Kit flexible arm pendant 2 electrical functions
AD026A	Kit linen holder
AD072A	Crutch holder on chrome plated board
AD076A	Mattress for bed extender
AD075A	Name holder on board
AC933A	Drainage bottle holder
AC934A	Redon bottle basket for 2 bottles
AC937A	Head end basket
AC941A	IV ROD
AC944A	Bottle holder
AC953A	Serum bottle holder on pole
AC955A	Pendant holder
AC968A	Equipotential cable link
AC981A	Urine bag holder
AC997A	Monitor holder

7.2 Accessory details

WARNING

The use of several accessory holders at the same time may reduce open area and interfere with the equipment or accessories that they hold. Read the LI150Ax bed User Manualbefore handling the accessories, in order to avoid injuring the patients or users.

7.2.1 Siderails

The LI150Ax bed may be equipped with AC996E, AC996C or AD070C siderails. The installation of the siderails is described below. Their use is explained in chapter 3 of the user manual. These siderails are intended for a 200 cm sleep surface.

Note: A siderail which is not positioned correctly could compromise safety or cause a malfunction.

WARNING

Read the LI150Ax bed User Manual before operating the siderails, in order to avoid injury for the patients or users.

7.2.1.1 Siderails "AC996E - AC996C"

To mount a siderail:

Before mounting a siderail, move aside any object or accessory which may get in the way of the siderail.

1 Put the siderail in its stored position on the side board with the locking mechanism at the foot end of the bed, as indicated by the label on the side board. Place the vices around the side board. (see figure 1).

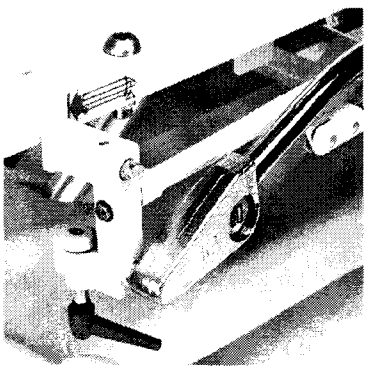

Figure 1

2 Unfold the siderail and mount it correctly.

3 Lock the two vices (tightening levers) on the side boards and make sure they are locked properly (see figure 2).

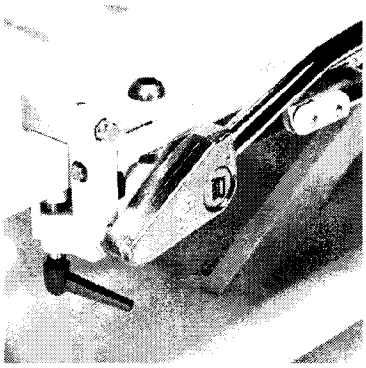

Figure 2

If a lever in locked position juts out over the bed frame (things may catch on it), it is possible to put it in a more convenient position. To do this, pull the lever down and turn it to face a more appropriate position (see figure 3).

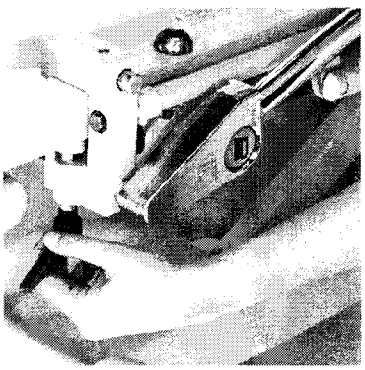

Figure 3

7.2.1.2 Siderail "AD070C"

This siderail is intended to be mounted onto beds which are equipped with an AD071A accessory holder bar (optional, according configuration) or a protective siderail bumper. Its operation and mounting procedures are identical to those of siderails AC996C and AC996E, except for positioning. This is carried out by placing the foot end vice against the end of the accessory holder bar at the foot end of the bed (see figure 4) or the protective siderail bumpers.

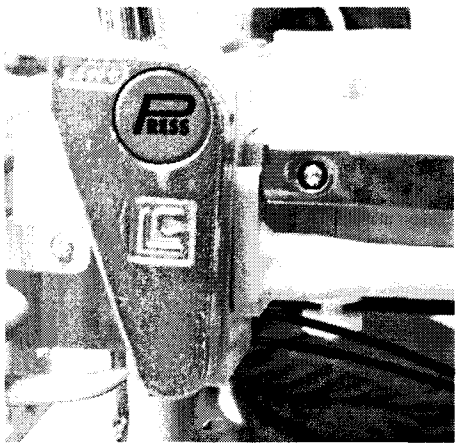

Figure 4

7.2.2 Poles

The LI150Ax bed may be equipped with "AC954E – AC954C – AD077C" fixed angle poles, "AD024E – AD024C – AD043C" pivoting angle poles, or "AD078C – AC911A" central poles. The standard working load is 80 kg for all fixed and pivoting angle poles and 40 kg for central poles. The normal use of these poles is intended for these loads. This value is extremely safe.

IMPORTANT: The poles are equipped with push handles, the height of which may be adjusted to suit the patient.

7.2.2.1 Fixed Angle Poles "AC954E - AC954C"

This pole is placed in one of the two corresponding supports on the base at the head end of the bed. It must be turned to the appropriate position for use (handle above the bed).

Next make sure that the retaining peg is fitted into its correct accommodation slot to prevent the pole from rotating.

WARNING

Failure to respect this procedure may cause the patient to lose balance and risk injury.

7.2.2.2 Fixed Angle Pole AD077C

This pole has the same measurements and characteristics as the AC954E and AC954C poles, but has two additional hooks which differ, (one pig tail type and the other a standard hook).

- The first, located on the upper end, is a pig tail type hook which accommodates a drainage bottle.

- The second, located in the middle of the pole, is a standard hook for wash cloths.

7.2.2.3 Pivoting Angle Pole "AD024E - AD024C"

This pole can be put into three different positions:

release position (parallel and above the headboard of the bed)

working position (above the Head Section)

transfer position (slightly turned toward the outside of the sleep surface).

It fits into one of the two accommodation slots on the base at the head end of the bed.

Make sure the retaining peg is in the accommodation slot intended for preventing rotation of the pole.

USE: Refer to the LI150Ax bed user manual.

WARNING

Failure to respect this procedure may cause the patient to lose balance and risk injury.

7.2.2.4 Pivoting Angle Pole AD043C

This pole has the same measurements and characteristics as the "AD024E - AC954C" poles but has two additional hooks which differ. (one pig tail type and one standard hook), as on the AD077C fixed angle pole.

7.2.2.5 Central Poles AD078C and AC911A

The two poles are similar in size and characteristics, but the AD078C model has two additional hooks, as the AD077C fixed angle pole.

To mount the pole, place it in the center of the headboard of the bed in the brackets intended for its accommodation, one on the headboard and the other on the bed frame. To do so:

1 Rotate the pole into working position (handle above the bed)

2 Insert the foot of the pole into the " support " of the bed frame and bring the two upper retaining pegs down into the 'pole bracket' on the board. (see figure 5).

Figure 5

7.2.3 Egress Bar AD021A

The egress bar allows the uncomplicated patient to get in and out of bed more easily. It can be fixed to either side of the bed in one of the brackets intended for its accommodation around the central part of the side boards on the bed frame. It can be stored to the right or the left of the foot end of the bed frame.

The egress bar can be ordered individually (ref: ADO21A) but requires the appropriate accommodation brackets on the bed frame. These are available in a kit. (ref: AD020A)

It is placed in the appropriate accommodation slots to the right and left of the central part of the bed frame, the latch towards the head of the bed.

To mount it, insert it into the appropriate slot (latch towards the head of the bed) and ratch it. Check it is securely locked into place in terms of rotation and height.

To remove it, pull the latch and lift the bar (see figure 6).

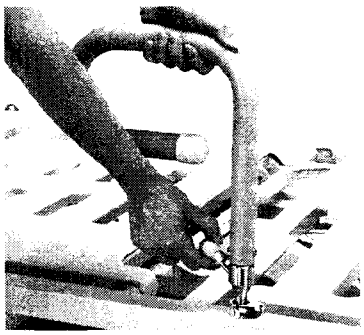

Figure 6

WARNING

This egress bar must always be ratched into place and under no circumstances be accommodated in the serum bottle holder at the head end of the bed.

Note: It is up to the nursing staff to determine the extent to which the patient is autonomous in order to decide whether or not he may use the egress bar safely.

7.2.4 Two fittings kit for the egress bar (AD020B)

The AD021A. egress bar cannot be used without this kit. It has two receptacles and two nuts (see figure 7).

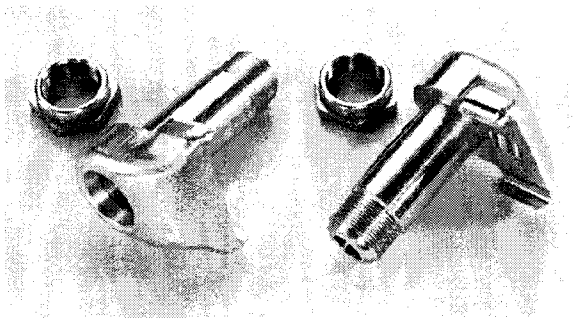

Figure 7

Note: These fittings can accommodate a serum bottle holder.

WARNING

The two fittings kit for the egress bar must be assembled on one side of the bed only.

WARNING

These two fittings must never be assembled at the head end of the bed in the place of the serum bottle holder.

Assembly:

Tools required: **1 27 mm open end wrench**
1 standard screwdriver

1. Using the 27 mm open end wrench, unscrew the receptacle vice for the serum bottle holder located at the foot end of the side board, on whichever side you wish, and remove the receptacle.
2. Using the standard screwdriver, remove the plastic cover located in the central part of the bed on the same side board as in step 1.
3. Insert the two receptacles for the egress bar in the appropriate holes of the side board.
4. Turn the receptacle "clips" towards the foot end of the bed.
5. Attach the corresponding vices of the receptacles which are to accommodate the egress bars.
6. Check that the receptacles are locked into position to prevent rotation.
7. Screw and tighten the vices using a 27 mm open end wrench.

7.2.5 Flexible arm pendant Kit AD023A (3 electrical functions) and AD034A (2 electrical functions)

The flexible arm pendant kit includes the flexible arm pendant and all required parts to mount it on the LI150Ax bed (see figure 8).

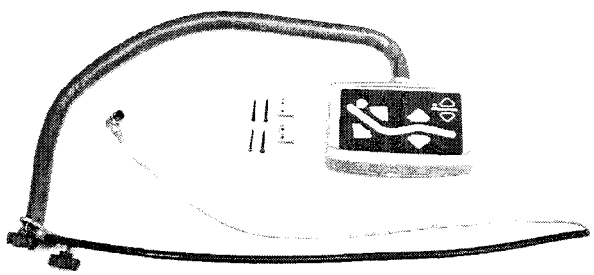

Figure 8

Assembly:

Tools required: 1 Phillips screwdriver
1 small flat screwdriver

1. Put the bed and the Head Section in high position.
2. Remove the hard surfaces from the bed frame.
3. Unplug the bed from its power source.

WARNING

Current is present on the connections when the bed is switched on. Technical personnel may be harmed if the bed is not unplugged from its power source.

4. Remove the cover from the power unit by unclipping the four clips holding it on and store the clips in a safe place.
5. Remove the plug lockout cover from the power unit. To do this, unclip the two latches which hold the cover (without removing them), and remove the cover.
6. Unplug the plug connected to input N° 5 on the power unit.

   Note: The numbers of the inputs and outputs of the power unit are indicated on the lockout cover and on the power unit itself. Each plug also has its own number engraved on it.
7. Using the small screwdriver, open the chute holding the arm cable under the bed frame and remove the cable. Close the chute.
8. Remove the initial arm from the bed.
9. Put the flexible arm pendant support into place to the left or right of the Head Section structure and fix it using the two adjustment knobs provided (A) (see figure 9).

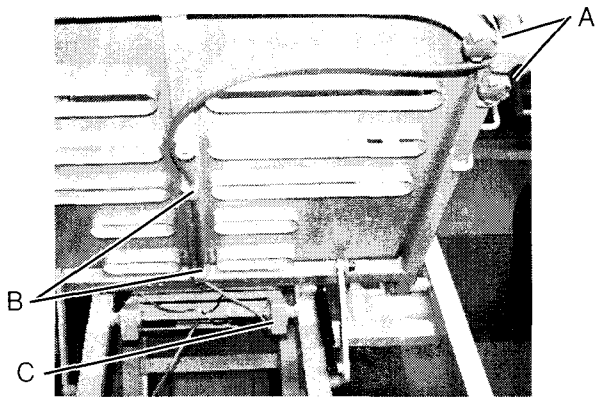

Figure 9

10. Using the medium head Phillips screwdriver, attach the cable and cable sleeve onto the Head Section structure using the two appropriate cable clamps (B) (see figure 9) and the provided screws.
11. Attach the chute (C) to the length of the elevation arm on the right side of the bed as indicated in figure 9

12. Using the small screwdriver , open the chute fixed to the elevation arm and insert the satellite control arm cable.
13. Connect the control arm plug to the input N 5 on the power unit making sure it is securely inserted to avoid poor contact and correct sealing.
14. Put the switch lockout cover back in place and press hard on the clips to make sure they are securely fastened.
15. Put the power unit cover and the four clips which secure it back in place.
16. Put the hard surfaces back in place and power in the bed to test the bed functions.

7.2.6 Linen holder kit (AD026A)

The AD026A linen holder kit for the LI150Ax bed without bed extension includes the linen holder tray and all parts required for mounting (guiding rails, screws and washers) (see figure 10). It is attached to the foot end of the bed under the bed frame.

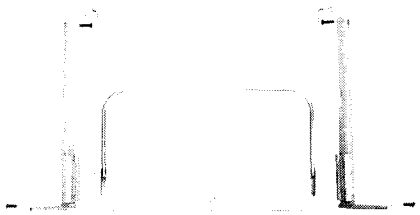

Figure 10

Assembly:
Required tool: 1 5 mm Allen wrench

1. Place one of the two rails under the foot end of the bed frame and locate the threaded receptacles.
2. Position the rail and the two fixing screws with the two washers. Note that the guide, once on the rail, must be at the foot end of the bed and turned towards the inner part of the bed frame.
3. Using the 5 mm Allen wrench, tighten the two screws.
4. Place and position the tray along the rail.
5. While holding the tray, place and position the second guiding rail.
6. While holding the rail and tray, put one of the remaining screws in place with their corresponding washers.
7. Using the 5 mm Allen wrench, tighten the two screws.
8. Check that the linen holder tray slides as it should.

7.2.7 Monitor Holder (AC997A)

The monitor holder is a moving structure attached to one of the foot panels of the bed. It is positioned in place of the footboard. The standard load of the monitor holder 25 kg. This value is extremely safe.

To use the holder, swing it around its support until it is above and parallel to the sleep surface. (see figure 11).

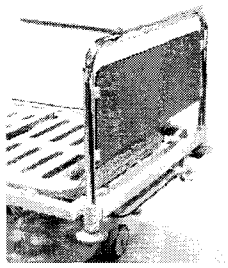

Figure 11

CAUTION

When putting the board in place, make sure the stored monitor holder is on the outer part of the bed.

7.2.8 Equipotential cable link (AC968A)

This cable is intended for linking intravenous or intracardiac medical equipment to the bed. This allows to equalize the potentials between all accessible metallic parts.

The cable is connected to the bed with the equipotential linking terminal located on the headboard channel.

WARNING

Failure to respect this procedure may result in electrical shock or injury to the patient.

The cable is equipped with two plugs (type POAG-WB 6 DIN) and a 2 m yellow green wire (see figure 12).

Figure 12

7.2.9 IV Rod AC941A

The AC941A IV rod is accommodated by one of the four serum holders.

Use: Refer to the LI150Ax bed User manual.

WARNING

Do not place the IV Rods in the IV Rod holders located at the head of the bed on the same side as the satellite control panel. Failure to do so may cause damage of the material or physical injury when raising the Head Section.

7.2.10 Head End Basket AC937A

The head end basket of the AC937A bed is hooked onto two supports located on the base at the head end of the bed.

7.2.11 Bottle Holder AC944A

The AC944A bottle holder can accommodate a 2 liter urine bottle. It is placed in one of the two appropriate brackets to the right or left of the bed under the sleep surface.

7.2.12 Control box Holder AC955A

The AC955A control box holder is placed in one of the two appropriate brackets to the right or left of the bed under the sleep surface.

7.2.13 Crutch Holder on Chrome Plated Board AD072A

The AD072A crutch holder hooks onto the vertical tube of the headboard round tube.

7.2.14 Serum Bottle Holder on Pole AC953A

The AC953A serum bottle holder is screwed to the upper part of the pole.

Notes :